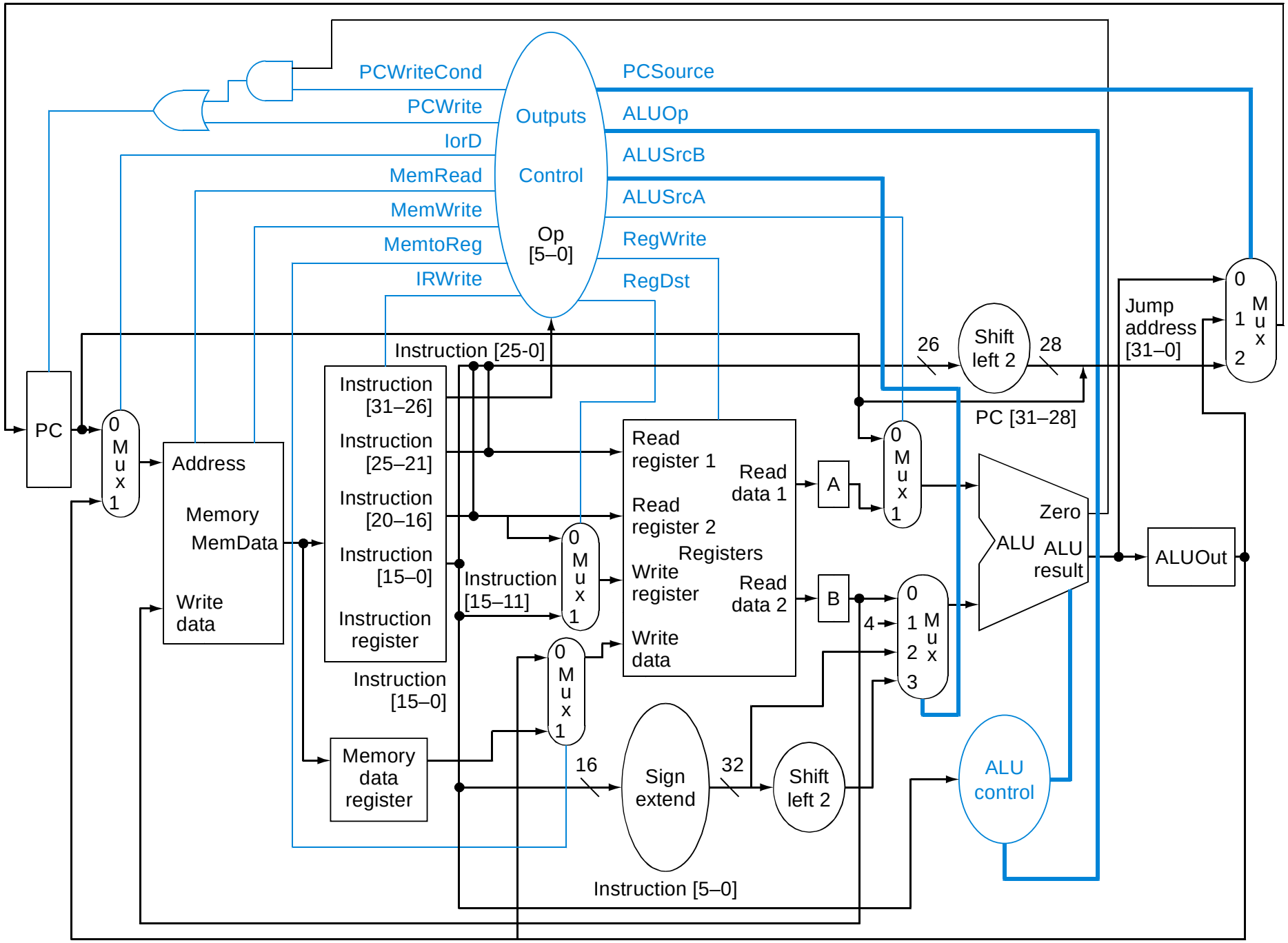
PCWriteCond
PCWrite
IorD
MemRead
MemWrite
MemtoReg
IRWrite
Outputs
Control
Op
[5–0]
PCSource
ALUOp
ALUSrcB
ALUSrcA
RegWrite
RegDst
PC
0
M
u
x
1
Address
Memory
MemData
Write
data
Instruction [25-0]
Instruction
[31–26]
Instruction
[25–21]
Instruction
[20–16]
Instruction
[15–0]
Instruction
register
Instruction
[15–0]
Instruction
[15–11]
Memory
data
register
Read
register 1
Read
register 2
Registers
Write
register
Write
data
Read
data 1
Read
data 2
A
B
4
26
Shift
left 2
28
PC [31–28]
Jump
address
[31–0]
0
1
2
M
u
x
Zero
ALU
ALU
result
ALUOut
0
1
2
3
M
u
x
16
Sign
extend
32
Shift
left 2
ALU
control
Instruction [5–0]

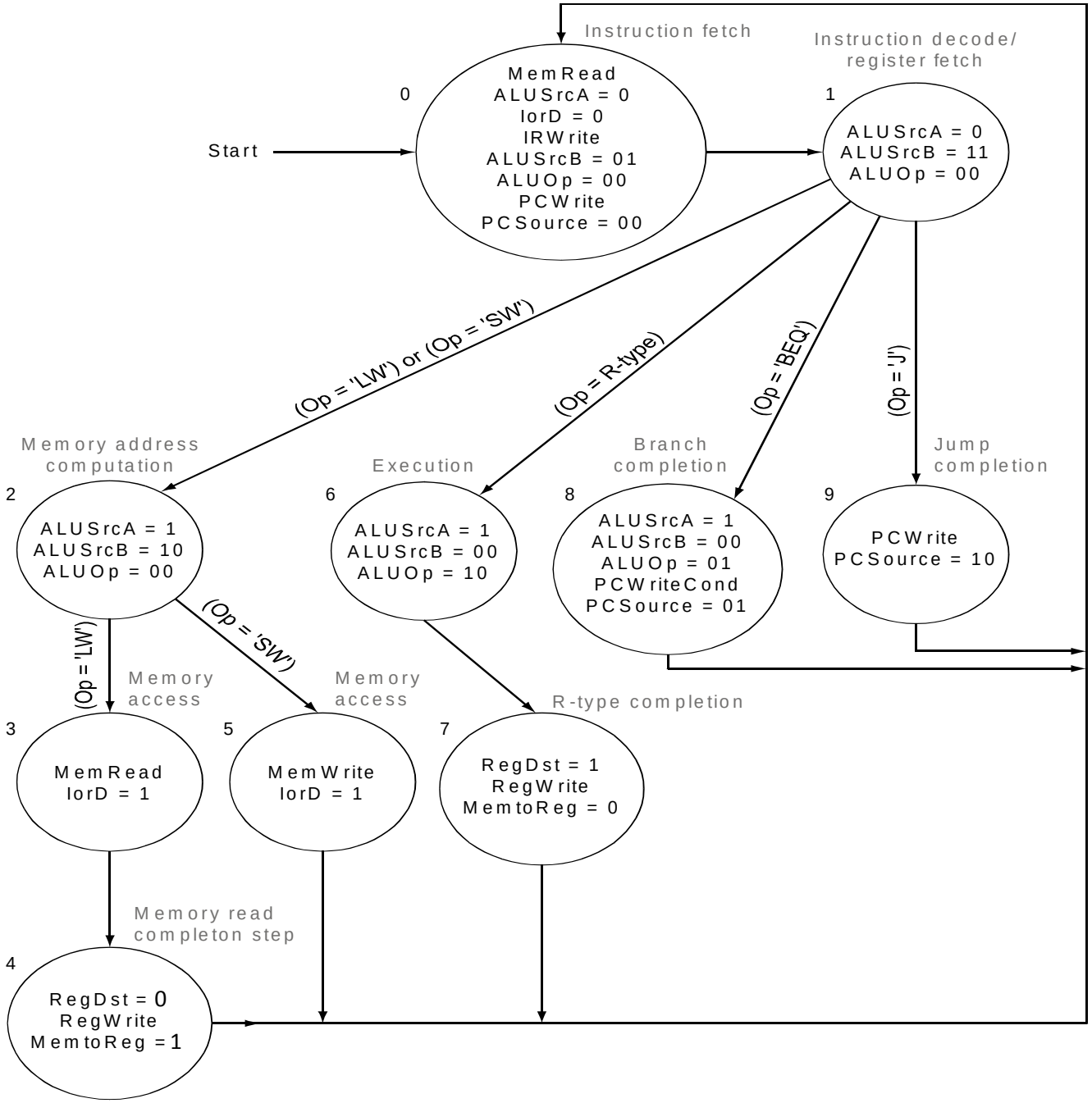
Instruction fetch
0
MemRead
ALUSrcA = 0
IorD = 0
IRWrite
ALUSrcB = 01
ALUOp = 00
PCWrite
PCSource = 00
Start
Instruction decode/
register fetch
1
ALUSrcA = 0
ALUSrcB = 11
ALUOp = 00
(Op = 'LW') or (Op = 'SW')
(Op = R-type)
(Op = 'BEQ')
(Op = 'J')
Memory address
computation
2
ALUSrcA = 1
ALUSrcB = 10
ALUOp = 00
Execution
6
ALUSrcA = 1
ALUSrcB = 00
ALUOp = 10
Branch
completion
8
ALUSrcA = 1
ALUSrcB = 00
ALUOp = 01
PCWriteCond
PCSource = 01
Jump
completion
9
PCWrite
PCSource = 10
(Op = 'LW')
(Op = 'SW')
Memory
access
3
MemRead
IorD = 1
Memory
access
5
MemWrite
IorD = 1
R-type completion
7
RegDst = 1
RegWrite
MemtoReg = 0
Memory read
completon step
4
RegDst = 0
RegWrite
MemtoReg = 1