ME 482 Experimental Tissue Mechanics
Professor A. Wagoner Johnson

9/2/16

Cartilage Tensile & Compressive Properties

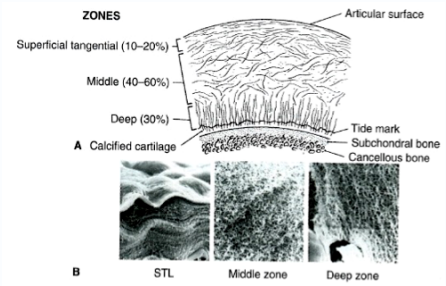

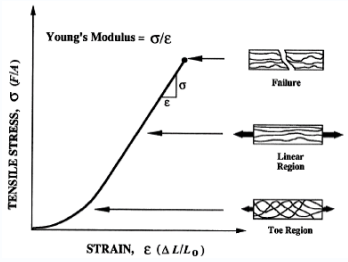

Nordin and frenkel

Recommended reading (general for AC):
Please see the 3rd slide

Today – Cartilage

- Mechanical behavior in tension
- Mechanical behavior in compression

- Assign HW 2 due 9/9

Suggested readings for structure-function-mechanical properties of cartilage

- Cowin Chapter 14 (good descriptions of types of cartilage etc)
  - 14.1-14.6 (pp 471-478 plus Fig 14.5 on pp 479)
  - 14.8 (pp 482-484 plus Fig 14.12 on pp 485)

- **<u>*Nordin and Frenkel Chapter 3</u>**
  - This is a good source for ~ the level of detail for mechanical properties and mechanical behavior for articular cartilage
  - We won't cover lubrication
  - <u>The flow charts at the end of the chapter are useful, but there is an error in one. I will point it out in the slides.</u>

- Mow and Huiskes
  - Chapter 2.4 (not a lot of additional detail)
  - "6&7" (some information on permeability)
  - Not a lot of detail, but some complementary information

Questions about fiber arrangement
(we discussed in class on Sept 2)

Structure—function—structure—function—structure--function

- Why do the fibers cross tidemark and enter calcified cartilage? What would happen if they did not?

- Why are fibers on surface oriented parallel to the surface? What would happen if they were not?

Topics for mechanical behavior of articular cartilage

- Anisotropy and inhomogeneity – important for properties but also constitutive modeling
- Measured properties –how are they measured? Why are they important?
  - H_A: aggregate compressive modulus
  - E: Equilibrium tensile modulus
  - μ: Shear modulus
  - G*: dynamic shear modulus
  - ν: Poisson's ratio
  - k: permeability
- Deformation mechanisms
- Viscoelasticity
- Variations in properties and factors affecting them
- Biphasic theory (fluid solid)
- Strain dependent permeability
- Biphasic creep and stress relaxation

What should you get out of it? (incomplete list)

- Understand how various properties are experimentally determined.
- Have a sense of the magnitude of the various properties
- Be able to describe deformation mechanisms (and sketch structures) and the corresponding stress-strain behavior when applicable
- Understand and describe the role of the constituents in the mechanical behavior
- Describe the interaction of constituents and how changes in the amount of one might affect properties of the tissue
- Have sense of how properties change with disease
- Understand how properties may vary with depth due to changes is structure and composition
- Why is behavior in compression different than tension?
- How are compression tests for cartilage different from compression tests you have done (or know about) for other materials?
- What are the properties in compression?

Constant Strain-Rate tensile tests (Equil. tensile tests) Fiber alignment with tensile axis

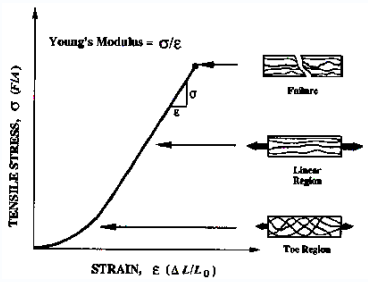

FIGURE 5-13. Typical stress–strain curve for articular cartilage in a uniaxial and uniform strain rate experiment. The toe region is marked by an increasing slope, whereas the linear region appears to be a straight line with a slope of σ/ε (354).

Nordin and Frenkel

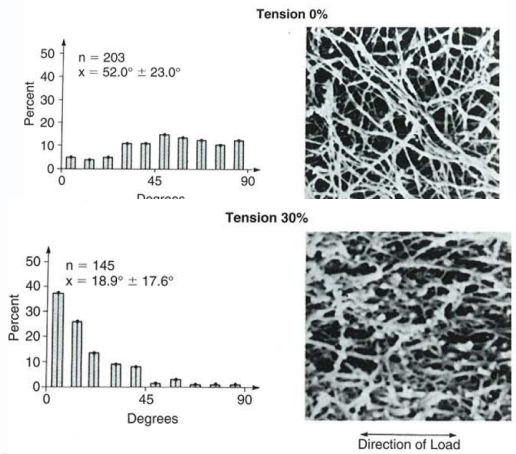

Collagen fibril alignment is clearly demonstrated by the scanning electron micrographs (×10,000) (*right*) of cartilage blocks under 0% stretch (A) and 30% stretch (B). The histograms (*left*), calculated from the micrographs, represent the percent of collagen fibers oriented in the direction of the applied tension. At 0% stretch the fibers have a random orientation; however, at 30% they are aligned in the direction of the applied tension. *Reprinted with permission from Wada, T., & Akizuki, S. (1987). An ultrastructural study of solid matrix in articular cartilage under uniaxial tensile stress.* J Jpn Orthop Assn, 61 FIG. 3-14

Equilibrium tensile tests via the stress relaxation experiment give tensile properties of the ***solid matrix***

- **Must eliminate fluid flow as a contributor to behavior
- **Test at 'equilibrium' (static tests – low strain rates)
  Example rate is 0.5 cm/min
- **Incremental experiments that allow **stress relaxation** in between deformation increments
- Equilibrium tensile modulus from linear region of up to ~15% strain, <1 MPa to 30 MPa
- Consider that there are variations due to species, age, joint, location in joint, depth, orientation relative to split lines, composition, state of degeneration

The toe region with non linear stiffness can be described using the fiber recruitment model

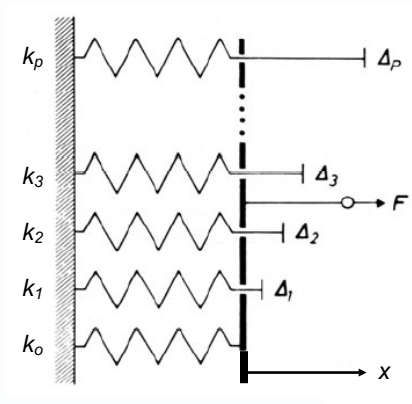

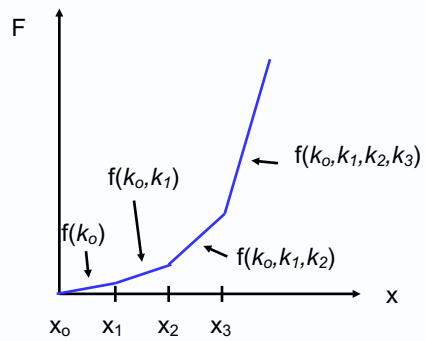

$$F = \sum_{i=0}^{p} k_i (x - x_i)$$

After x_p, no more fibers recruited

A HW assignment will be posted on Piazza on the fiber recruitment model this afternoon. It is due 9/9 in class.

In the assignment you will use MatLab or Excel to generate force-displacement and stress-strain curves for a given sets of fibers with particular properties (e.g. fiber stiffness, number of fibers, etc).

This is a nice exercise to help connect something physical, that you can easily envision (pulling fibers), with a simple mathematical model (fiber recruitment model).

The exercise will help you to understand how these factors (number of fibers, stiffness, how straight they are) contribute to the shape of the curve, and how to write a simple code based on a this model to generate the curves.