ME 482 Experimental Tissue Mechanics
Professor A. Wagoner Johnson
10/07/16 (started)
Bone: determinants of properties and failure in whole bone

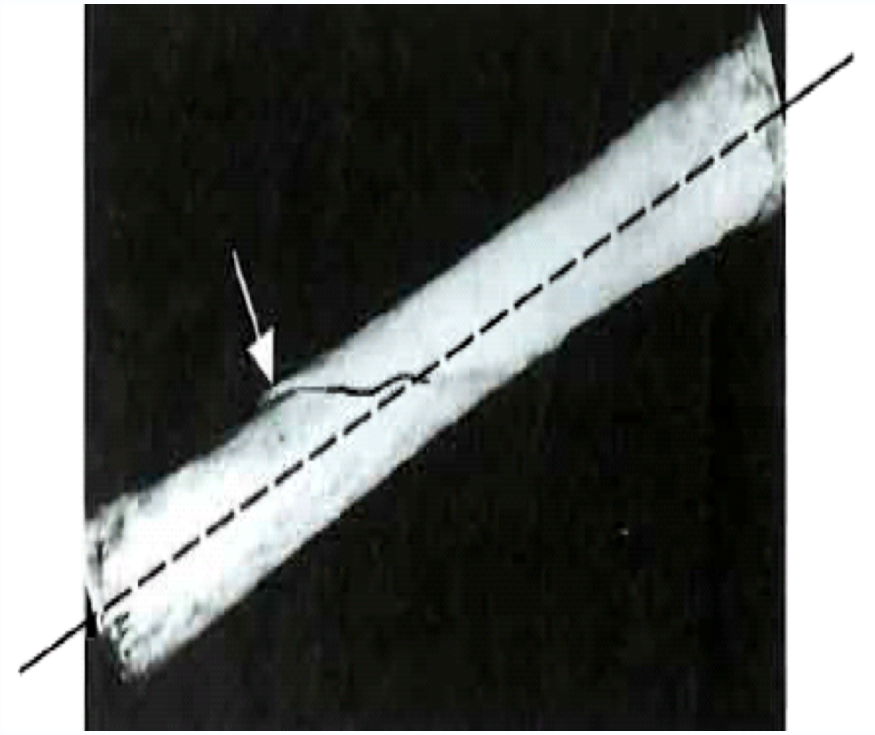

Nordin and Frenkel

Note – most of this lecture was done on the board.

Geometry and torsional loading (Nordin and frenkel)

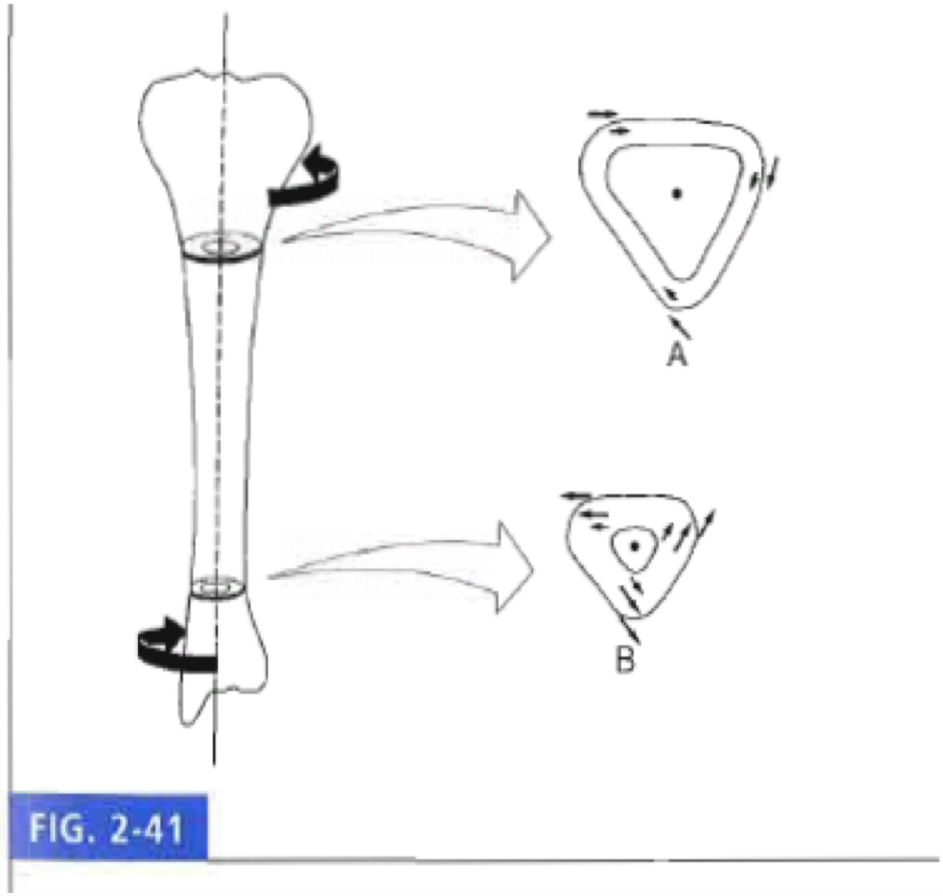

FIG. 2-41

Ch 4 Martin and Burr
compressive failure stress > tensile > shear

TABLE 4.1. Typical mechanical properties for cortical bone

Property	Human	Bovine
Elastic modulus, GPa		
Longitudinal	17.4	20.4
Transverse	9.6	11.7
Bending	14.8[a]	19.9[b]
Shear modulus, GPa	3.51	4.14
Poisson's ratio	0.39	0.36
Tensile yield stress, MPa		
Longitudinal	115	141
Transverse	—	—
Compressive yield stress, MPa		
Longitudinal	182	196
Transverse	121	150
Shear yield stress, MPa	54	57
Tensile ultimate stress, MPa		
Longitudinal	133	156
Transverse	51	50
Compressive ultimate stress, MPa		
Longitudinal	195	237
Transverse	133	178
Shear ultimate stress, MPa	69	73
Bending ultimate stress, MPa	208.6[a]	223.8[b]
Tensile ultimate strain		
Longitudinal	0.0293	0.0072
Transverse	0.0324	0.0067
Compressive ultimate strain		
Longitudinal	0.0220	0.0253
Transverse	0.0462	0.0517
Shear ultimate strain	0.33	0.39
Bending ultimate strain	—	0.0178[b]

How does whole bone fail if loaded in bending? Torsion?
What does the crack look like relative to the long axis of the bone?

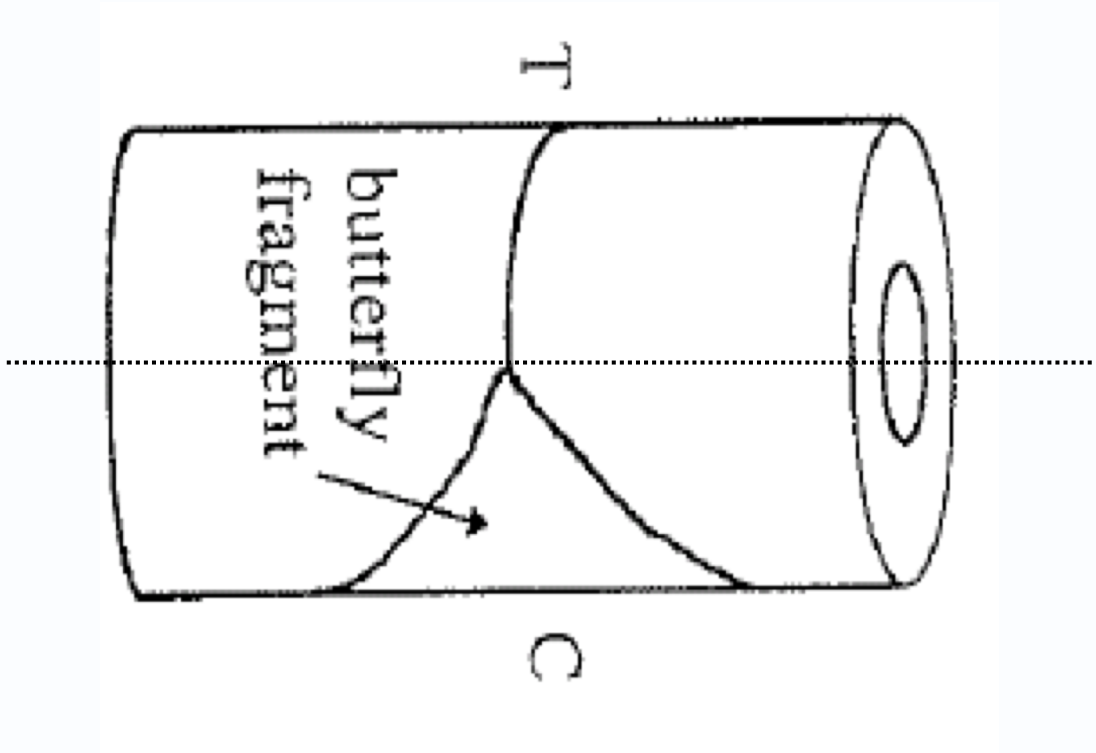

How does whole bone fail if loaded in torsion? What does the crack look like relative to the long axis of the bone?

Fracture with torsional loading of whole bone

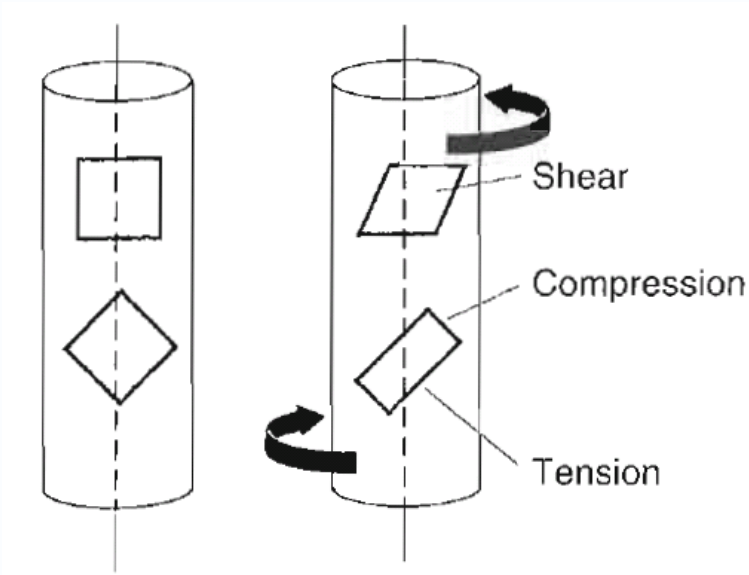

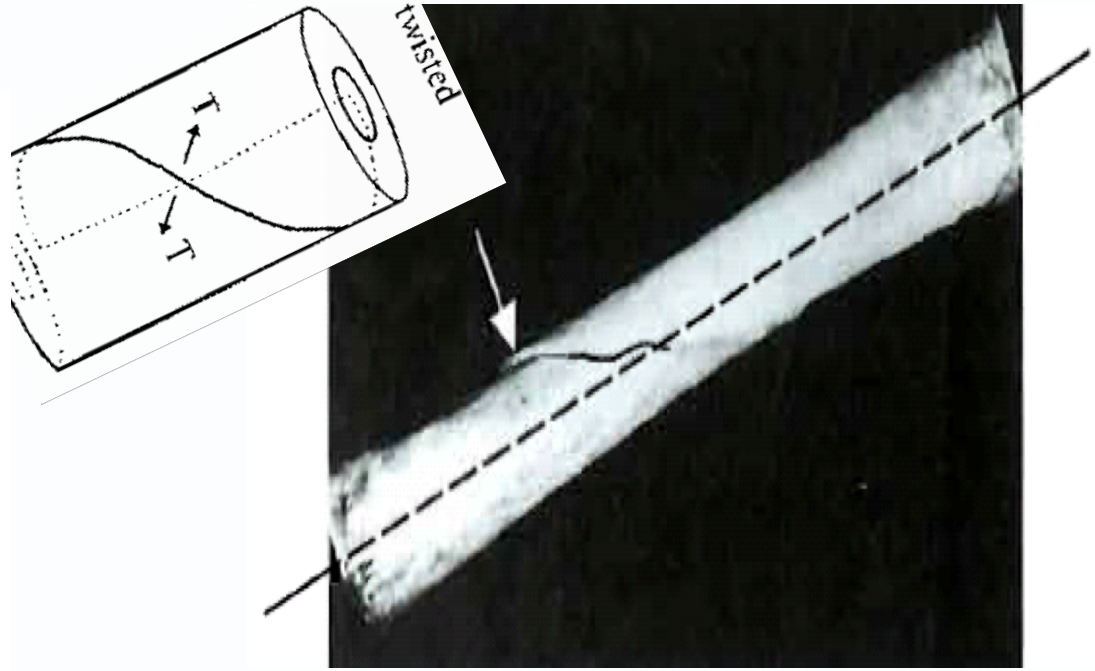

FIG. 2-30

Schematic representation of a small segment of bone loaded in torsion. Maximal shear stresses act on planes parallel and perpendicular to the neutral axis. Maximal tensile and compressive stresses act on planes diagonal to this axis.

FIG. 2-31

Experimentally produced torsional fracture of a canine femur. The short crack *(arrow)* parallel to the neutral axis represents shear failure; the fracture line at a 30° angle to the neutral axis represents the plane of maximal tensile stress.

(Nordin and frenkel, Matrin and Burr)

Range of cellular structures: rods, plates, varying densities, orientations

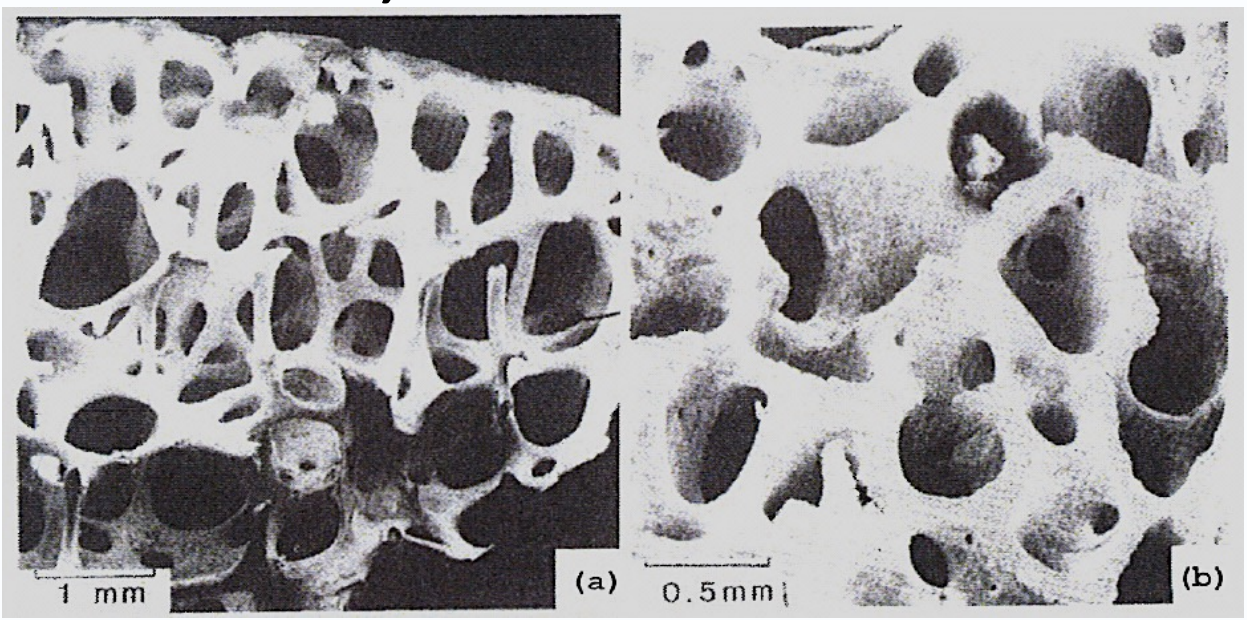

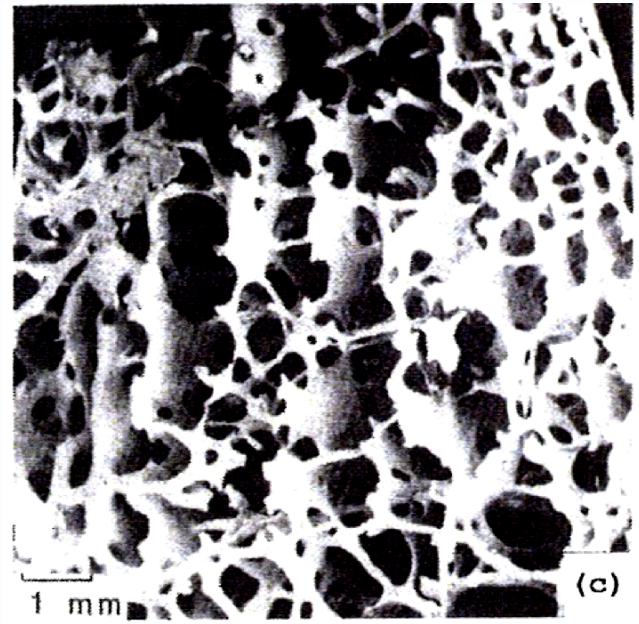

Figure 11.2 Scanning electron micrographs showing the cellular structure of cancellous bone. (a) A specimen taken from the femoral head, showing a low-density, open-cell, rod-like structure. (b) A specimen from the femoral head, showing a higher-density, roughly prismatic cell structure. (c) A specimen from the femoral condyle, of intermediate density, showing a stress-oriented, parallel plate structure, with rods normal to the plates (from Gibson, 1985).

Ashby and Gibson

Trabecular structure develops along principle stress trajectories

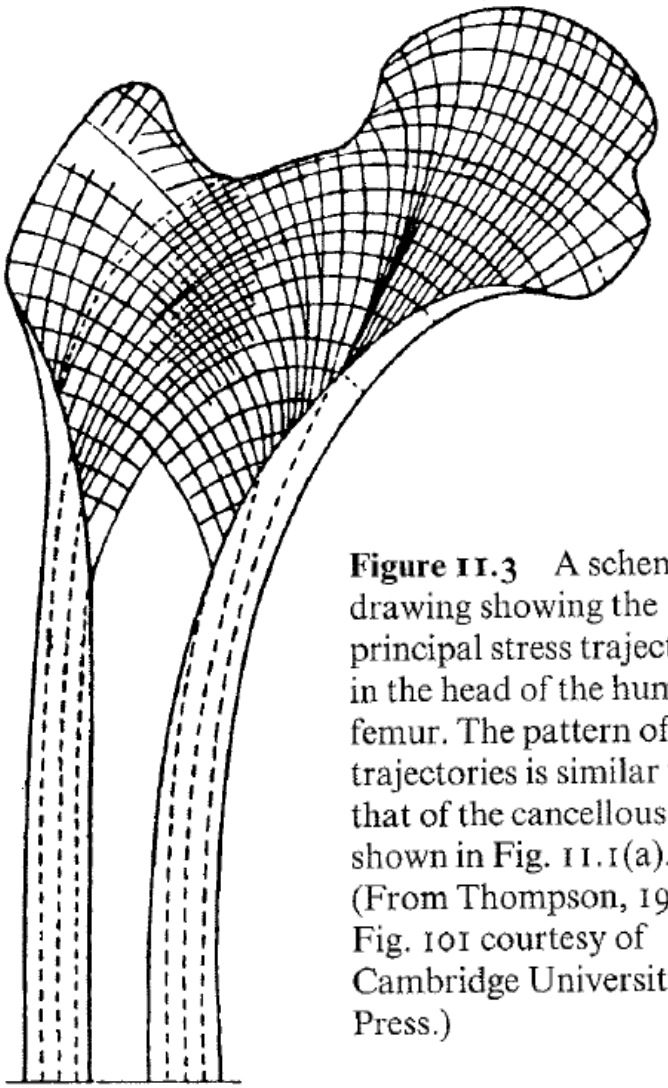

Figure 11.3 A schematic drawing showing the principal stress trajectories in the head of the human femur. The pattern of the trajectories is similar to that of the cancellous bone shown in Fig. 11.1(a). (From Thompson, 1961, Fig. 101 courtesy of Cambridge University Press.)

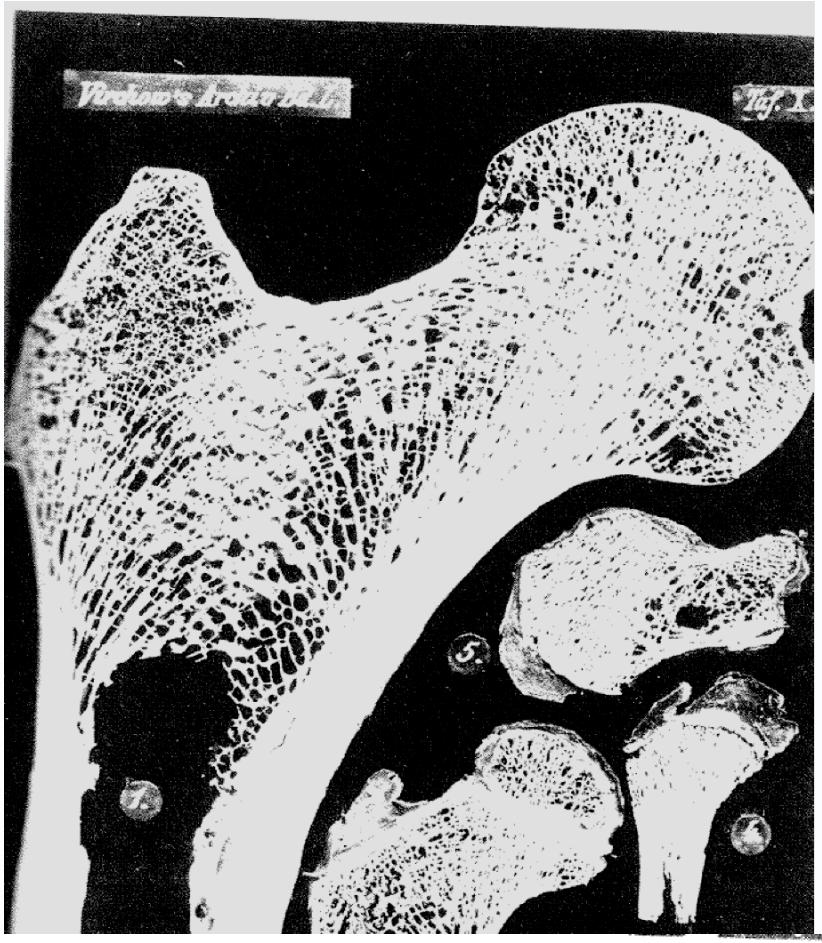

Figure 9.4

Cross-sections showing the open porous structure of trabecular bone. The large sample on the left is the femoral head seen in a longitudinal section. Note the transition from cortical bone in the shaft of the femur to trabecular bone at the head, with only a thin layer of cortical bone on the surface. This photograph is from an 1870 article by the German anatomist Julius Wolff in which he compared the orientation of the trabeculae in the proximal femur to the predicted trajectories of the principal stresses [7].

Introductory Biomechanics, Ch9

What determines mechanical properties of trabecular bone?
(more detail in subsequent lecture notes – know and understand these..)

- Density (apparent density)
- Architecture (i.e. plates vs rods)
- Location (specific bone)
- Location (within the same bone)
- Orientation (anisotropy)
- Mineral content (material density)
- Species
- Rate
- Wet vs dry