ME 482 Experimental Tissue Mechanics
Professor A. Wagoner Johnson
10/17/16 (started)
Bone:
mechanical properties trabecular bone

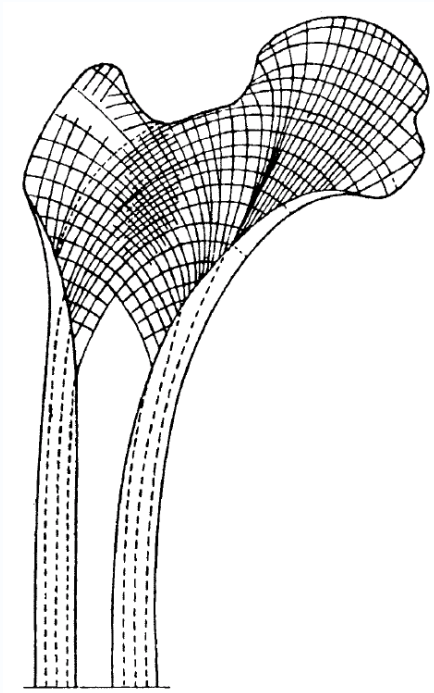

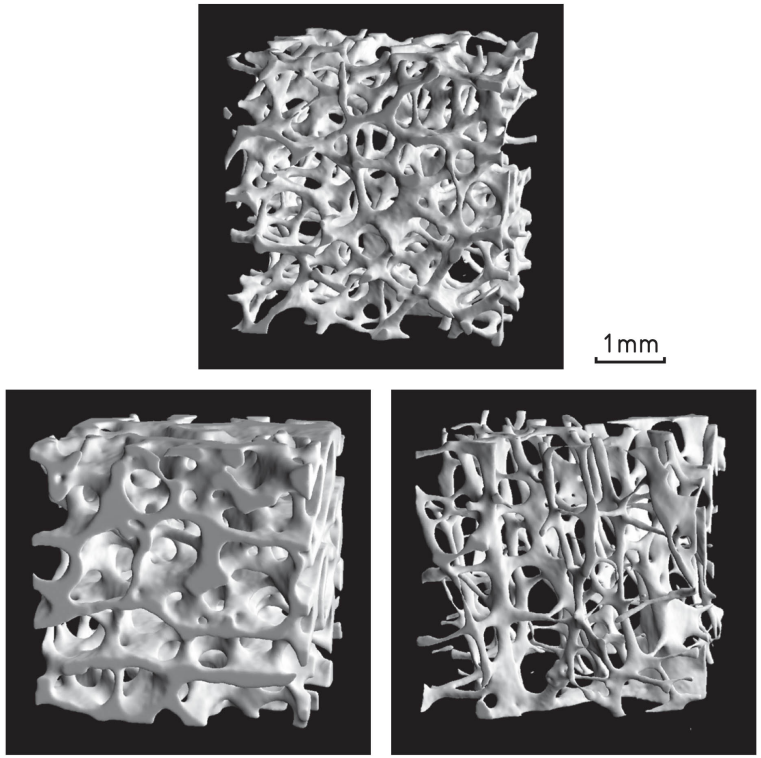

Most figs in lecture from Gibson, Ashby, Harley, "Cellular Materials in Nature and Medicine," 2010

- **Some topics to be covered on bone (in general)**
  - Trabecular bone
    - Mech properties and determinants of material properties and apparent properties
      - Deformation mechanisms (cellular solids)
      - Damage
      - Potentially fatigue and fracture
  - Cortical bone
    - Mechanical properties and determinants
    - Fracture and fatigue behavior and mechanisms
- **Some recommended reading for trabecular bone:**
  - ***Martin and Burr CH4;***
  - ***Keaveny et al Ann Rev Biomed Eng 2001, 3:307-3333;***
  - ***Gibson and Ashby, Cellular Solids***
  - ***Gibson, Ashby, Harley, Cellular Solids in Nature, 2010***

What determines mechanical properties of trabecular bone? How do we describe the "material" trabecular bone?

ALL of these influence the mechanical behavior
e.g. across sites and species strength and modulus can vary an order of mag.

- Apparent density (measuring bulk mass and volume)
- Material density (e.g. change in mineral density)
- Architecture (i.e. plates vs rods)
- Orientation (anisotropy)
- Location (specific bone)
- Location (within the same whole bone)
- Age (which influences some properties like density and architecture)
- Species
- Rate of deformation
- Hydration (wet vs dry – Lab 4 for whole bone)

Trabecular bone is

- a composite
- anisotropic
- open porous (cellular solid)
- heterogeneous

What does "property" mean at different structural levels for trabecular bone?

- Whole bone
  - We discussed:
    - measured prop = (shape and size factor) x (material property)
- ***Apparent properties***
- Tissue properties
  - Measure at the tissue level using techniques like
    - Atomic force microscopy (AFM)
    - Nanoindentation
  - Are properties of cortical and cancellous bone the same at this level? No agreement in literature.
- Constituent properties
  - Collagen fibers, collagen, mineral crystals
  - Difficult to measure due to size
  - Research on modeling collagen and mineral crystals

What does "apparent property" mean?

- This is the what you measure in a "standard" test.
- E.g. Apparent density, ρ^*
    - Weigh, measure dimensions of sample
  - Density of the dense solid, ρ_s
    - Weigh, measure fully dense solid
    - OR Something like Archemides that allows for to account for "open porosity" i.e. the porosity that the liquid can infiltrate.
- E.g. apparent modulus, E*
    - Measure load – displacement, convert to stress and strain by using sample dimensions
  - Modulus of the solid, ρ_s
    - Measure for fully dense solid (if exists)
    - OR use something like AFM or nanoindentation

Wide range of cellular structures with different "architectures."

What does this mean for (apparent)properties?

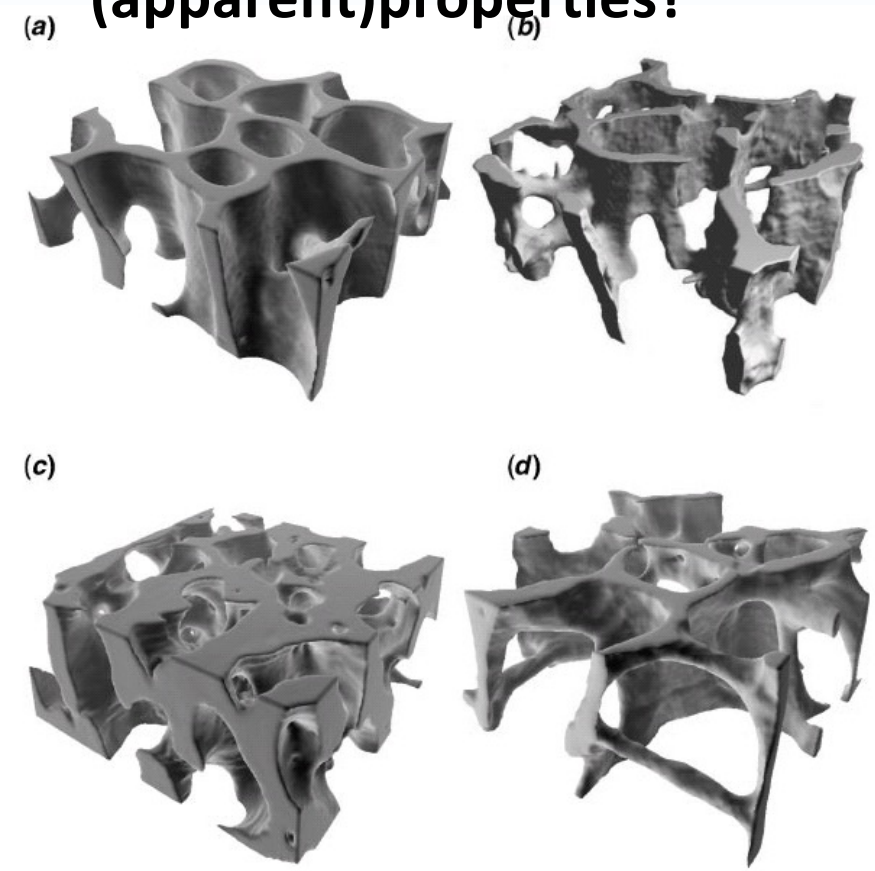

Figure 1 Volume rendering (20-μm resolution) of (*a*) bovine proximal tibial, (*b*) human proximal tibial, (*c*) human femoral neck, and (*d*) human vertebral trabecular bone. All specimens have the same bulk dimensions ($3 \times 3 \times 1$ mm^3).

Keaveny et al, 2001

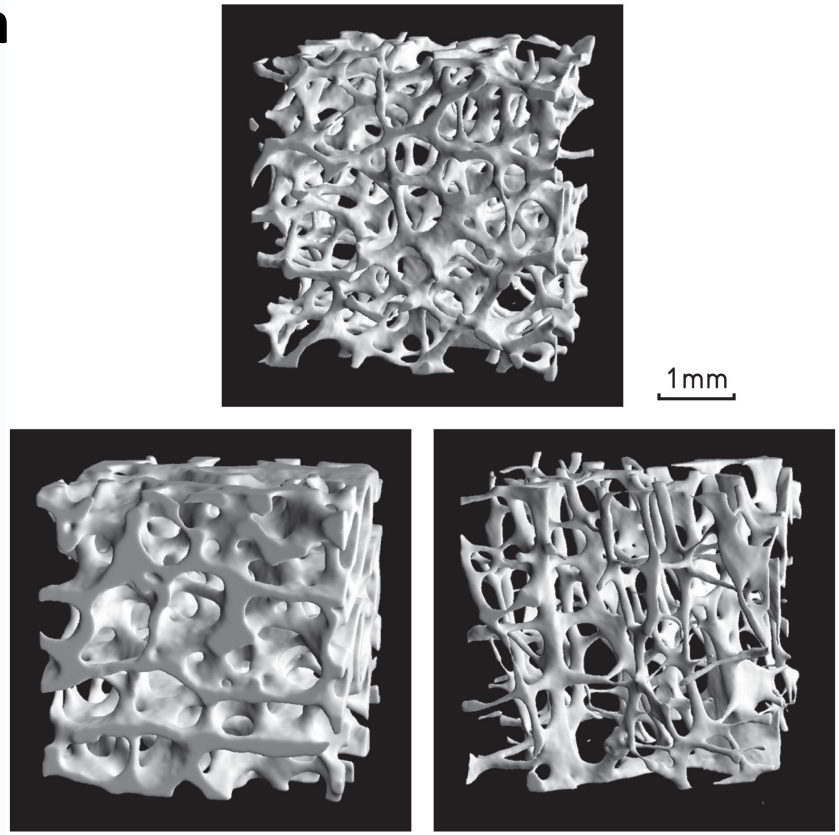

Fig. 5.2 Microcomputed tomography images showing the cellular structure of trabecular bone. (a) lumbar spine 42 year old male, with rod-like structure r*/rs = 11.1% (b) femoral head 37 year old male, with more plate-like structure r*/rs = 25.6% (c) lumbar spine 59 year old male r*/rs = 6.1%. Each image represents a 4mm x 4mm x 4mm cube. **(**All images courtesy of Prof. Ralph Muller, ETH Zurich, Switzerland.) **FROM Gibson, Ashby, and Harley 2010**

Reported "apparent" properties

from compiled data in Gibson, Ashby, & Harley 2010 from studies as early as 70's

Apparent Property	Value
Young's modulus	18 – 3600 MPa
Compressive Strength	< 1 MPa – 130 MPa
Tensile Strength	~10 MPa ~ 20 MPa
How does this compare to steels? Metallic alloys?	
Modulus Strength (most symmetric Ten/Comp)	All ~30 GPa, mostly 10-30 GPa ~200-1600MPa, ~100-500 MPa

HUGE range for trabecular bone in particular…WHY??

We will understand this as we go through trabecular bone properties and deformation mechanisms.

What do you need to know about properties?

- Approximate values (in particular in relation to other tissues)
- Relative values for different orientations, loading modes (and why they are different)
- Values relative to other engineering materials and tissues (and why they are different)
- Properties are not isotropic, they are anisotropic
  - Modulus
    - Longitudinal > transverse > shear
  - Mtrength
    - Longitudinal > transverse > shear
- Strength is asymmetric (what does this mean?)
  - Compression > tension > shear

In general,

- strength
  - Metals > ceramics > cortical bone > trabecular bone ~ tendon, ligament, polymer (bone cement)
  - 600-1000 MPa > 300MPa > 100-150 MPa > 8-50, 20-35, 20MPa
- Modulus
  - Ceramics > metals > cortical bone > polymer (bone cement) ~ tendon, ligament
  - 350 GPa > 200GPa > 10-15 GPa > 2 GPa

What do you need to know about properties?

TABLE 2-1

Mechanical Properties of Selected Biomaterials

	Ultimate Strength (MPa)	Modulus (GPa)	Elongation (%)
Metals			
Co-Cr alloy			
Cast	600	220	8
Forged	950	220	15
Stainless steel	850	210	10
Titanium	900	110	15
Polymers			
Bone cement	20	2.0	2–4
Ceramic			
Alumina	300	350	<2
Biological			
Cortical bone	100–150	10–15	1–3
Trabecular bone	8–50		2–4
Tendon, ligament	20–35	2.0–4.0	10–25

Adapted from Kummer, J.K. (1999). Implant biomaterials. In J.M. Spivak, P.E. DiCesare, D.S. Feldman, K.J. Koval, A.S. Rokito, & J.D. Zuckerman (Eds.). *Orthopaedics: A Study Guide* (pp. 45–48). New York: McGraw-Hill.

Nordin and Frenkel

Ch 4 Martin and Burr **CORTICAL BONE**

compressive failure stress > tensile > shear

TABLE 4.1. Typical mechanical properties for cortical bone

Property	Human	Bovine
Elastic modulus, GPa		
Longitudinal	17.4	20.4
Transverse	9.6	11.7
Bending	14.8[a]	19.9[b]
Shear modulus, GPa	3.51	4.14
Poisson's ratio	0.39	0.36
Tensile yield stress, MPa		
Longitudinal	115	141
Transverse	—	—
Compressive yield stress, MPa		
Longitudinal	182	196
Transverse	121	150
Shear yield stress, MPa	54	57
Tensile ultimate stress, MPa		
Longitudinal	133	156
Transverse	51	50
Compressive ultimate stress, MPa		
Longitudinal	195	237
Transverse	133	178
Shear ultimate stress, MPa	69	73
Bending ultimate stress, MPa	208.6[a]	223.8[b]
Tensile ultimate strain		
Longitudinal	0.0293	0.0072
Transverse	0.0324	0.0067
Compressive ultimate strain		
Longitudinal	0.0220	0.0253
Transverse	0.0462	0.0517
Shear ultimate strain	0.33	0.39
Bending ultimate strain	—	0.0178[b]

10/17/16 (started)

Variations in (apparent) properties between anatomic sites *and* within *one* anatomic site for trabecular bone

- Compressive modulus can vary 100-fold from one location to another in proximal tibia
- Strength can vary 5-fold

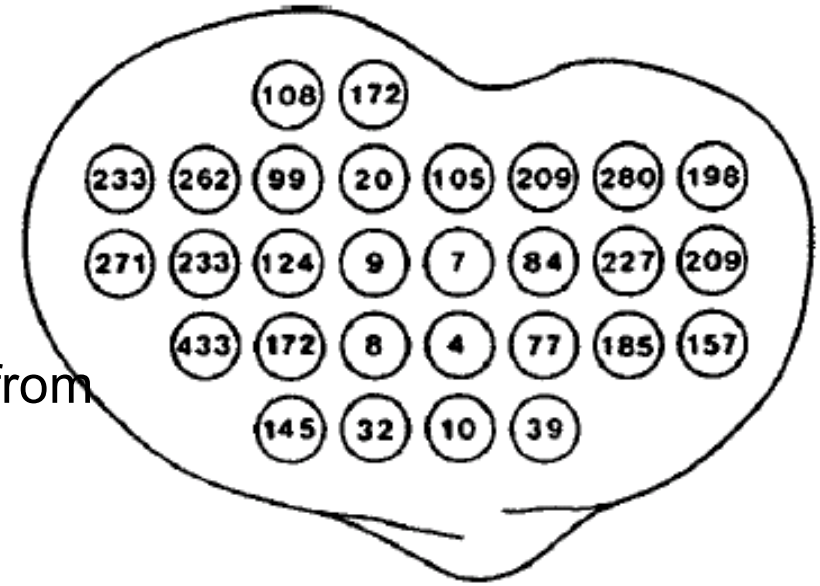

Figure 2 Elastic moduli from a proximal transverse section of a human tibia. Circled values are measured moduli (in megapascals) of specimens taken from that region.

TABLE 1 Mean values of modulus and ultimate strength for various anatomic sites

Anatomic site (reference)	Age Range	Modulus (MPa)	Ultimate Strength (MPa)
Vertebra (22)	15–87	67 ± 45	2.4 ± 1.6
Proximal tibia (63)	59–82	445 ± 257	5.3 ± 2.9
Proximal femur (132)	58–85	441 ± 271	6.8 ± 4.8
Calcaneus (48)	Not reported	68 ± 84	1.4 ± 1.3
Bovine proximal tibia (71)	Not applicable	2380 ± 777	24 ± 8.3

Keaveny et al, 2001

Solid cell-wall modulus for trabecular bone – TISSUE (material or solid) level properties (adapted from Gibson, Ashby, Harley, 2010)

Solid modulus generally taken to be 18 GPa (by above reference)

Method	Type of bone; Loading direction	E_s (GPa) Wet	E_s (GPa) Dry	Reference
Ultrasound	Human tibia	14.8		Rho et al, 1993
Ultrasound	Human femur	17.5		Turner et al., 1999
Ultrasound	Canine femur longitudinal	19.9		Jorgensen and Kundu, 2002
Finite element back-calculation	Human femur	18		Bayraktar et al., 2004
Finite element back-calculation	Human femur (various sites)		16.0-22.5	Chevalier et al., 2007
Nanoindentation	Human vertebra transverse		13.4	Rho et al., 1997
Nanoindentation	Human vertebra longitudinal transverse		19.4 15.8	Rho et al., 1999
Nanoindentation	Human vertebra longitudinal transverse		22.7 17.0	Roy et al., 1999
Nanoindentation	Human femur		18.4	Turner et al., 1999
Nanoindentation	Human femur transverse	11.4		Zysset et al., 1999
Nanoindentation	Human femur longitudinal		19.6-22.3 mean = 20.9	Chevalier et al., 2007

What does stress-strain curve look like?

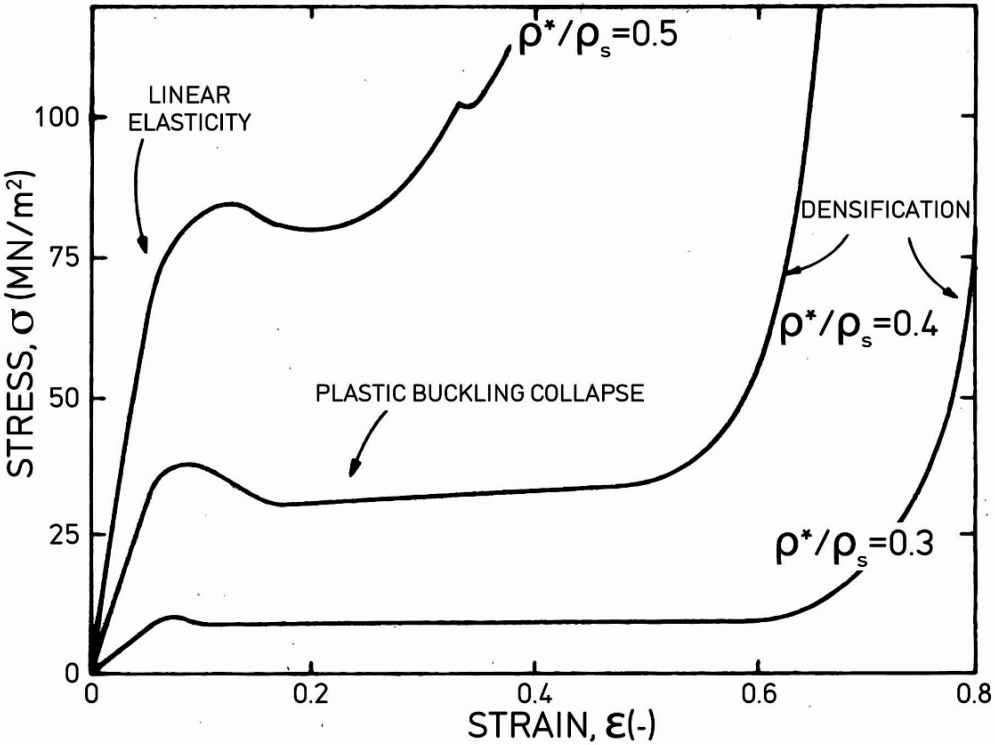

Stress-strain curve for trabecular bone looks very much like that of other man-made or natural cellular solids…foams, sponges, honeycombs, etc.

Table 5.2 Solid cell-wall properties for human trabecular bone

Property	Value
Density, ρ_s	1800 kg/m^3
Young's modulus, E_s	18 GPa
Compressive strength, $\sigma_{ys\ comp}$	182 MPa
Tensile strength, $\sigma_{ys\ ten}$	115 MPa

Fig. 5.4 Compressive stress-strain curves for several relative densities of wet trabecular bone (Reprinted with kind permission of John Wiley and Sons, from Hayes and Carter, 1976, Fig. 1a).

Deformation of Al honeycombs shows correlation between stress-strain behavior and deformation mechanisms

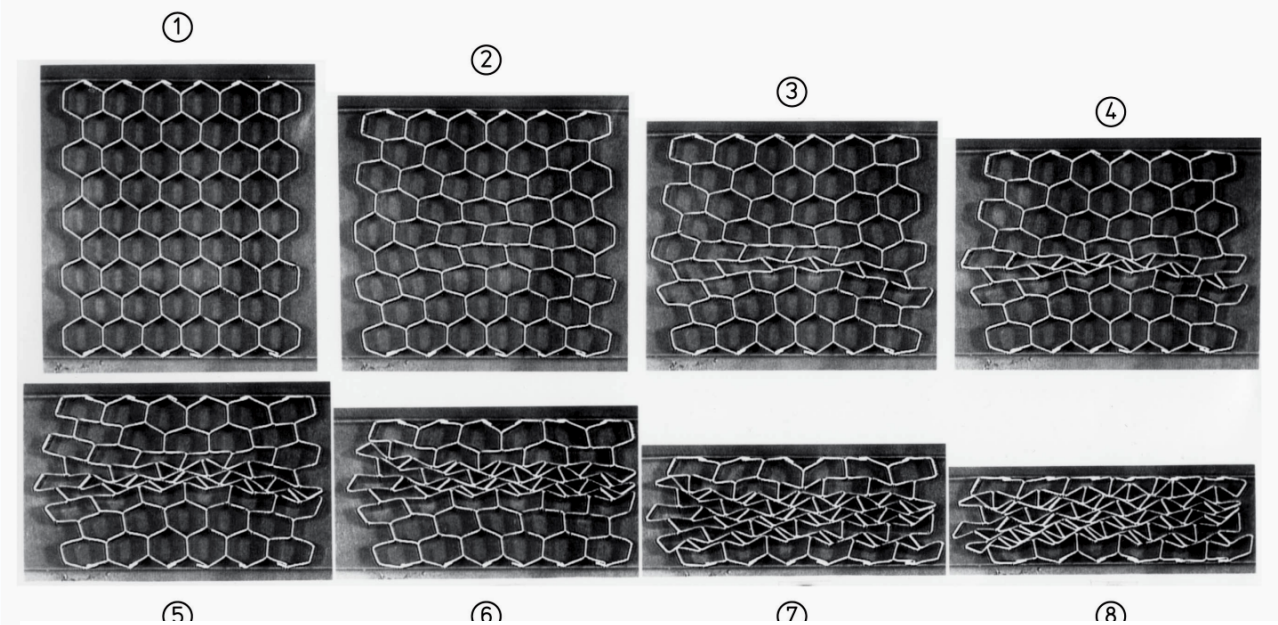

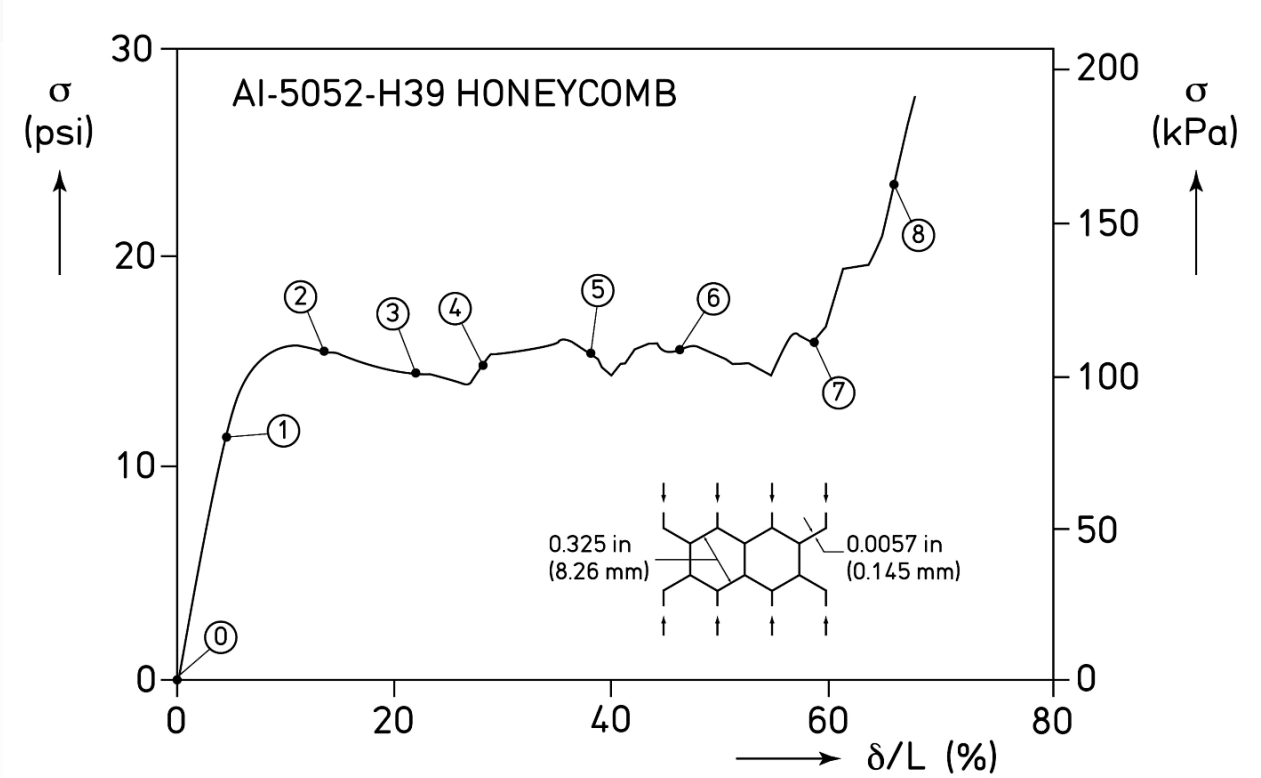

Cellular Solids Theory (Gibson and Ashby)

<u>Provides mechanistic insight into failure of trabecular bone</u>

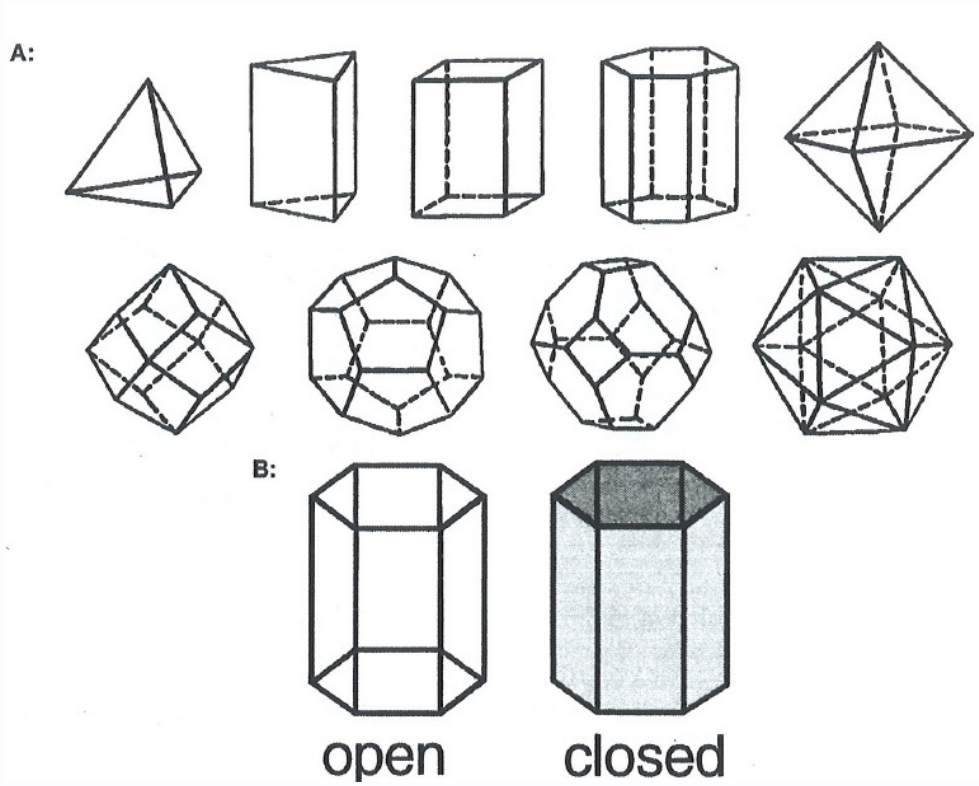

FIGURE 16.9 (A) Various three-dimensional geometries for the unit cell in cellular solid analysis. (B) Cells can be open or closed, depending on whether the walls are solid or hollow. The former results in a plate type structure, while the latter is more rod type. (C) A structure can be loaded so as to produce only axial loading without any bending, or, to cause bending of obliquely oriented struts. A derivation for the latter is included in the text. ((A) Adapted from Gibson, L. J. and Ashby, M. F., *Cellular Solids: Structures & Properties*, 2nd ed., Oxford, Pergamon, 1997. With permission.)

Data for **relative young's modulus** of cancellous bone (**unspecified orientation**).

Quite interesting given how many variables affect properties…

What leads to all the scatter shown?

1. Anisotropy – different orientations for different studies
2. Wall or strut properties – some variations though ps and Es used for all
3. Strate rate – tests carried out over range of 5 orders of magnitude
4. Moisture content – variations between studies
5. Morphology (equiaxed, prism, plates, etc)

Given all that pretty amazing how well they line up.

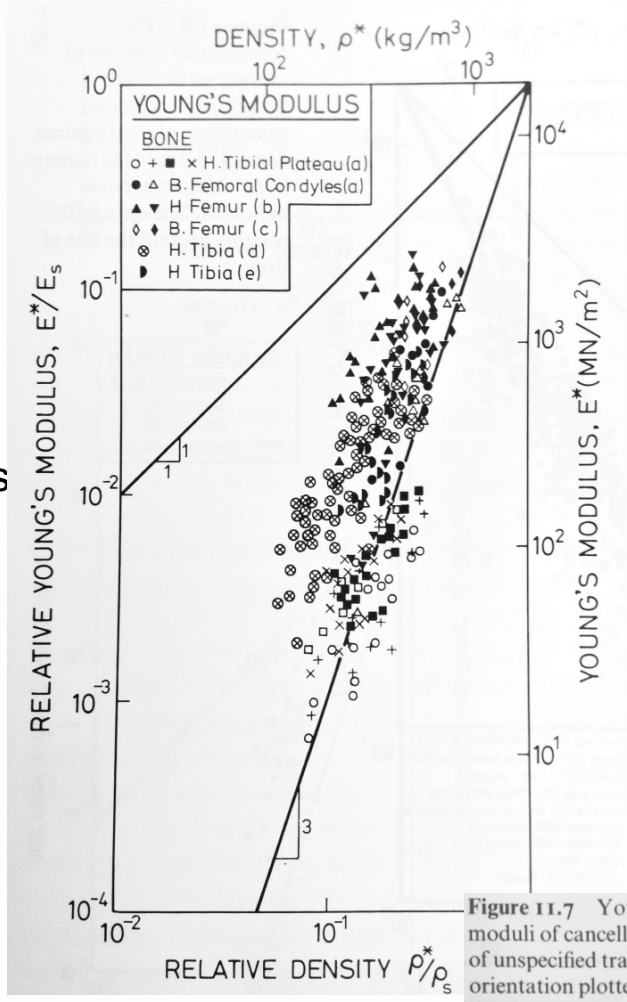

Figure 11.7 Young's moduli of cancellous bone of unspecified trabecular orientation plotted against density. The data fall between lines of slope 1 and 3. Data from: (a) Carter and Hayes, 1977; (b) Carter *et al.*, 1980; (c) Bensusan *et al.*, 1983; (d) Hvid *et al.* (1989); (e) Linde *et al.* (1991). H = human, B = bovine.

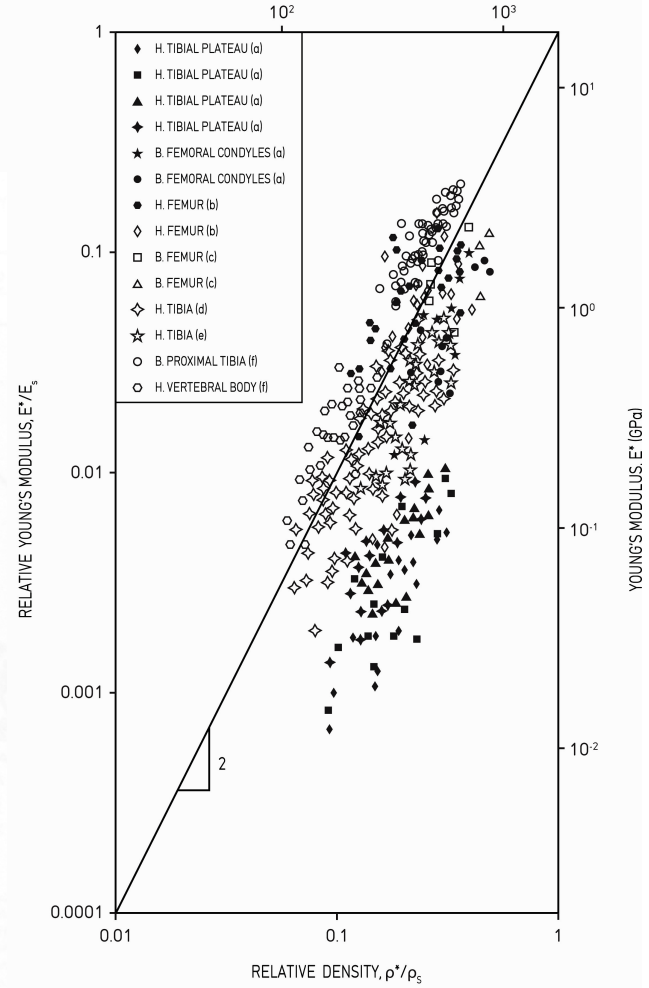

Young's modulus trabecular bone of unspecified orientation (Gibson, Ashby, Harley, Fig. 5.7)

Model for low density, equiaxed structure (Fig. 11.12a)

We derived some relative properties for this structure in class.
Some other models follow in next slides. We did not specifically derive properties for those models, but you can find them in Gibson and Ashby.

$$\frac{E^*}{E_s} = C_1 \left(\frac{\rho^*}{\rho_s}\right)^2$$ equiaxed low density

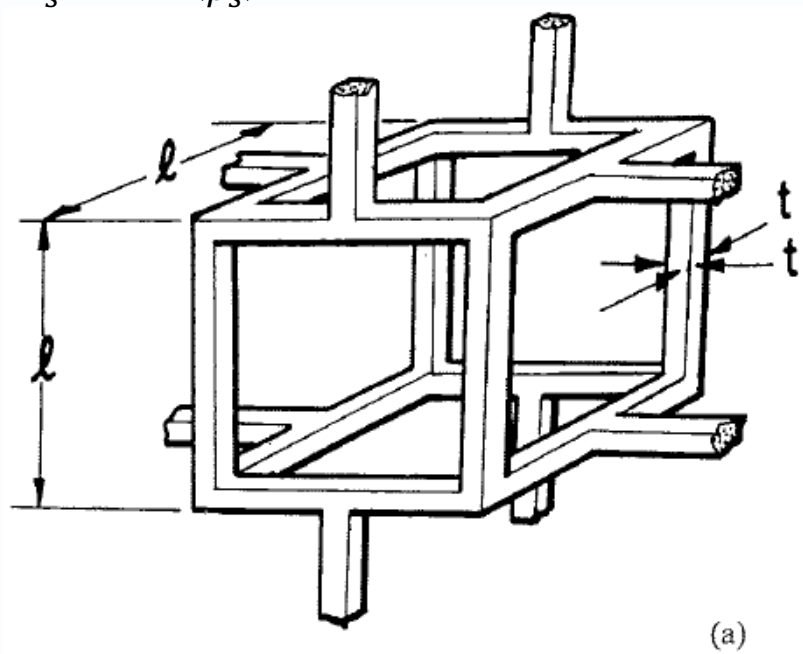

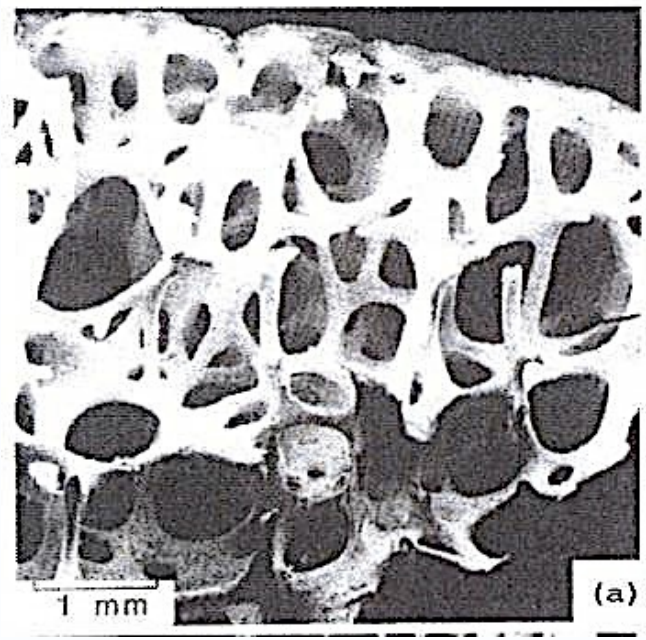

Figure 11.2 Scanning electron micrographs showing the cellular structure of cancellous bone. (a) A specimen taken from the femoral head, showing a low-density, open-cell, rod-like structure. (b) A specimen from the femoral head, showing a higher-density, roughly prismatic cell structure. (c) A specimen from the femoral condyle, of intermediate density, showing a stress-oriented, parallel plate structure, with rods normal to the plates (from Gibson, 1985).

Model for higher density, equiaxed structure (Fig. 11.12b)

We *did not* derive relative properties for this structure. Gibson and Ashby do in their book.

Relative modulus varies with density with power 2 if perforation is large, closer to 1 if perforation is small.

$$\frac{E^*}{E_s} = C_1 \left(\frac{\rho^*}{\rho_s}\right)^{1<n<2}$$ equiaxed, perforated (higher density)

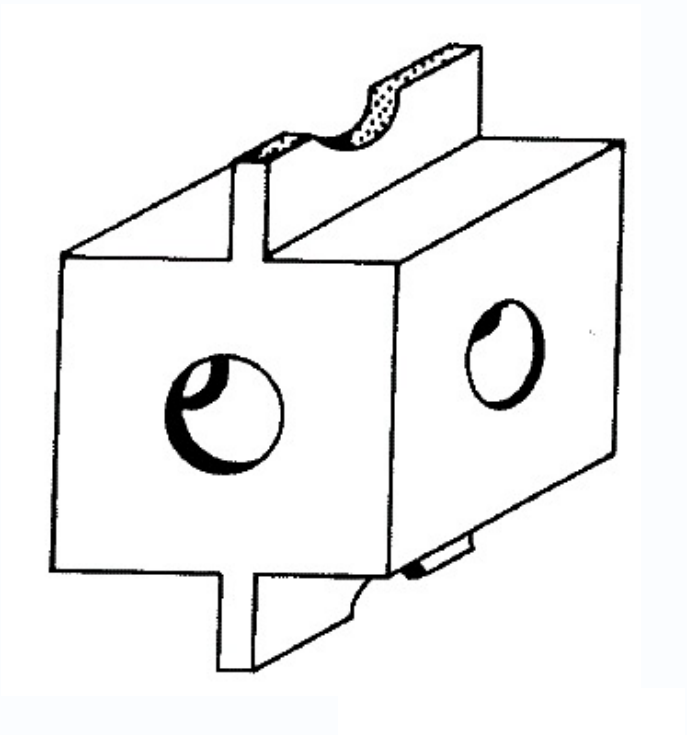

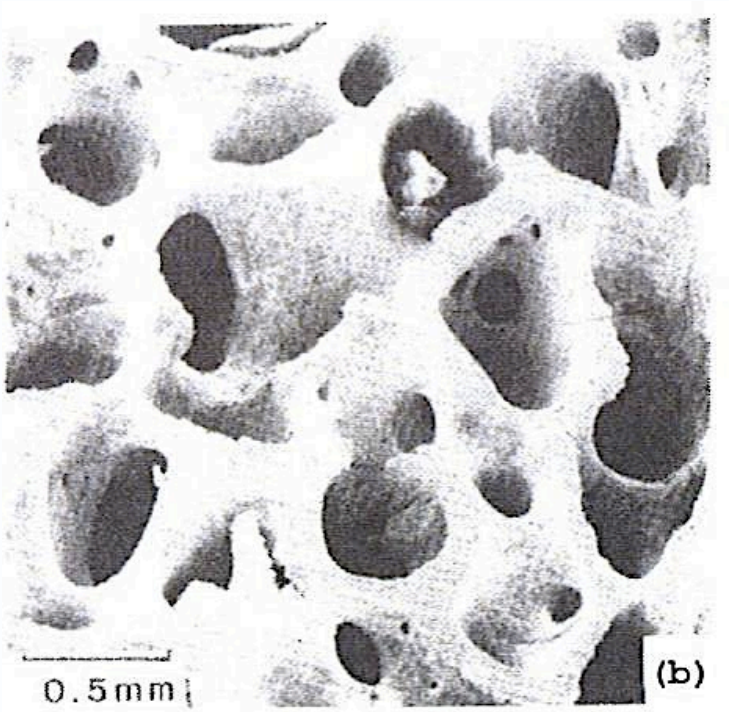

Stress oriented parallel plate structure model (Fig. 11.12d)

$\frac{E_T^*}{E_s} = C_4 \left(\frac{\rho^*}{\rho_s}\right)^3$ plate-like structure, normal to plates

$\frac{E_L^*}{E_s} = C_5 \left(\frac{\rho^*}{\rho_s}\right)$ Plate-like, parallel to plates

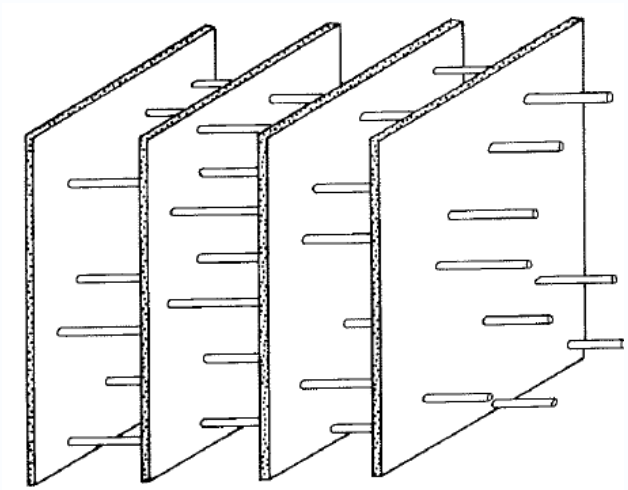

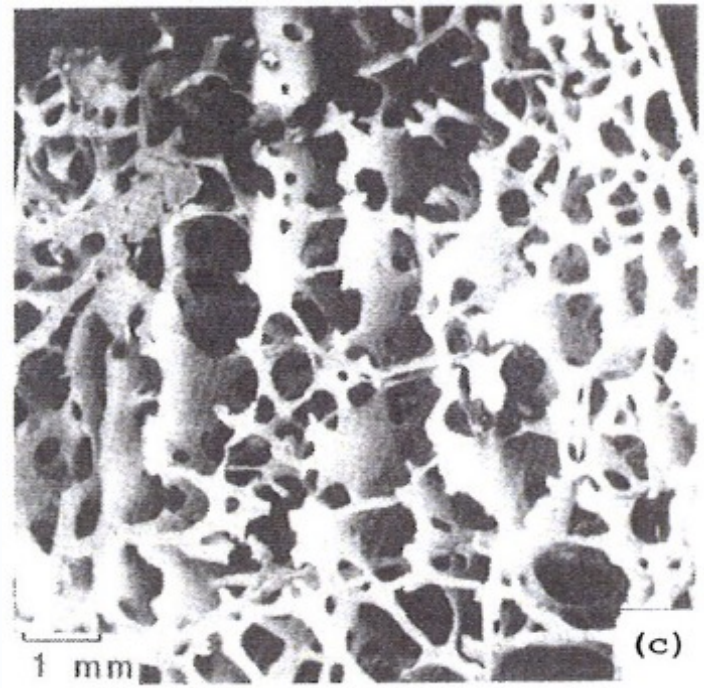

Figure 11.2 Scanning electron micrographs showing the cellular structure of cancellous bone. (a) A specimen taken from the femoral head, showing a low-density, open-cell, rod-like structure. (b) A specimen from the femoral head, showing a higher-density, roughly prismatic cell structure. (c) A specimen from the femoral condyle, of intermediate density, showing a stress-oriented, parallel plate structure, with rods normal to the plates (from Gibson, 1985).

Stress oriented prismatic model (Fig. 11.12c)

$$\frac{E_T^*}{E_s} = C_2 \left(\frac{\rho^*}{\rho_s}\right)^3 \quad \text{prism, transverse loading}$$

$$\frac{E_A^*}{E_s} = C_3 \left(\frac{\rho^*}{\rho_s}\right) \quad \text{prism, axial loading}$$

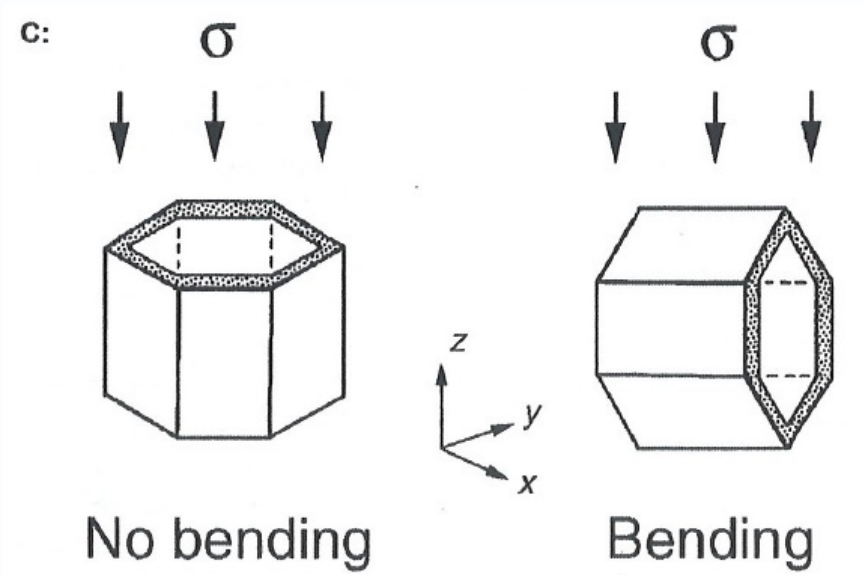

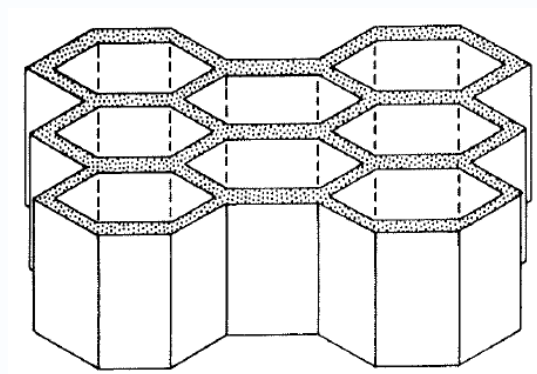

FIGURE 16.9 (A) Various three-dimensional geometries for the unit cell in cellular solid analysis. (B) Cells can be open or closed, depending on whether the walls are solid or hollow. The former results in a plate type structure, while the latter is more rod type. (C) A structure can be loaded so as to produce only axial loading without any bending, or, to cause bending of obliquely oriented struts. A derivation for the latter is included in the text. ((A) Adapted from Gibson, L. J. and Ashby, M. F., *Cellular Solids: Structures & Properties*, 2nd ed., Oxford, Pergamon, 1997. With permission.)

$$\frac{E^*}{E_s} = C_1 \left(\frac{\rho^*}{\rho_s}\right)^2$$ equiaxed low density

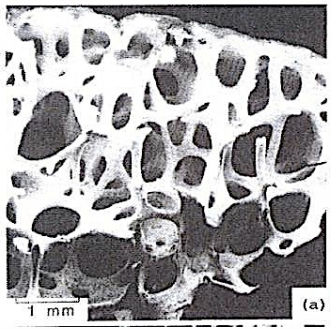

$$\frac{E^*}{E_s} = C_1 \left(\frac{\rho^*}{\rho_s}\right)^{1<n<2}$$ equiaxed, perforated (higher) density

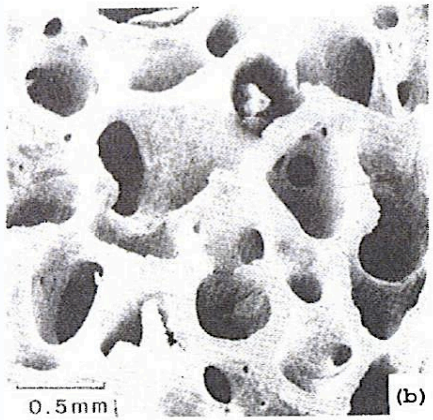

$$\frac{E_T^*}{E_s} = C_2 \left(\frac{\rho^*}{\rho_s}\right)^3$$ prism, transverse loading

$$\frac{E_A^*}{E_s} = C_3 \left(\frac{\rho^*}{\rho_s}\right)$$ prism, axial loading

$$\frac{E_T^*}{E_s} = C_4 \left(\frac{\rho^*}{\rho_s}\right)^3$$ plate-like structure, normal to plates

$$\frac{E_L^*}{E_s} = C_5 \left(\frac{\rho^*}{\rho_s}\right)$$ Plate-like, parallel to plates

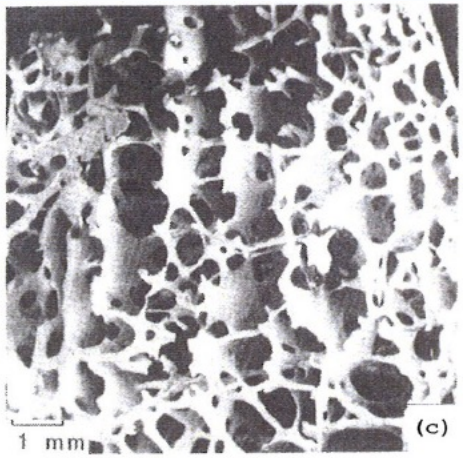

Young's modulus of bone with prismatic structure. Slope of 1 if loaded on axis, 3 if across axis. This is consistent with honeycomb behavior derived with cellular solids.

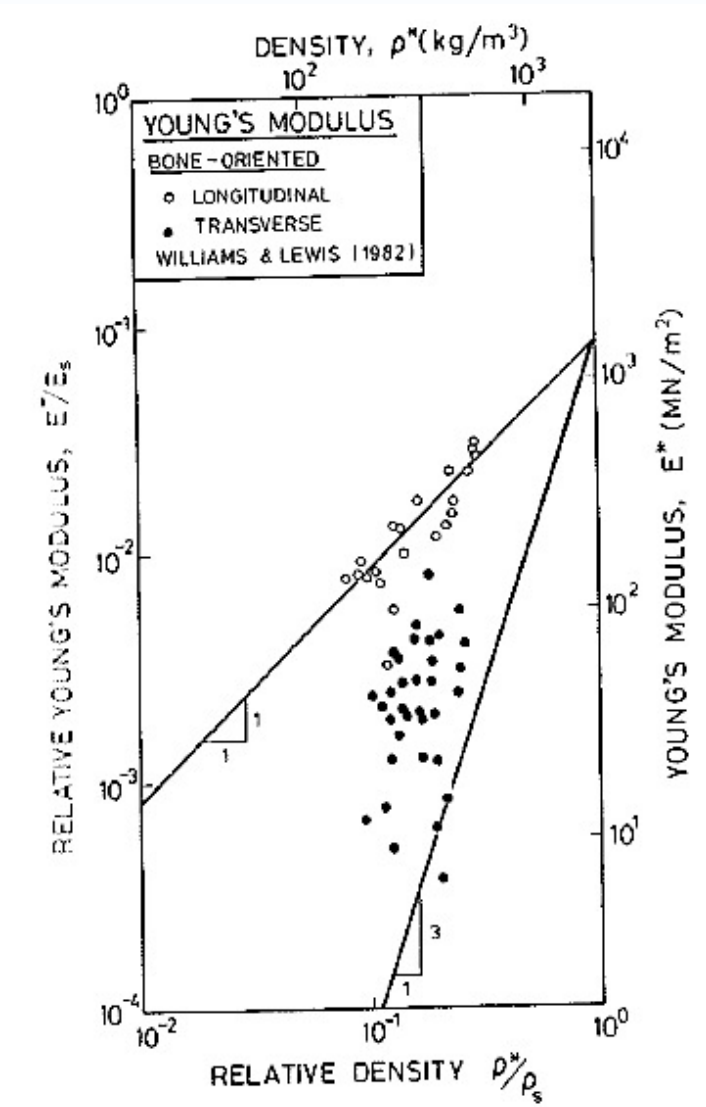

$$\frac{E_T^*}{E_s} = C_2 \left(\frac{\rho^*}{\rho_s}\right)^3 \quad \text{prism, transverse loading}$$

$$\frac{E_A^*}{E_s} = C_3 \left(\frac{\rho^*}{\rho_s}\right) \quad \text{prism, axial loading}$$

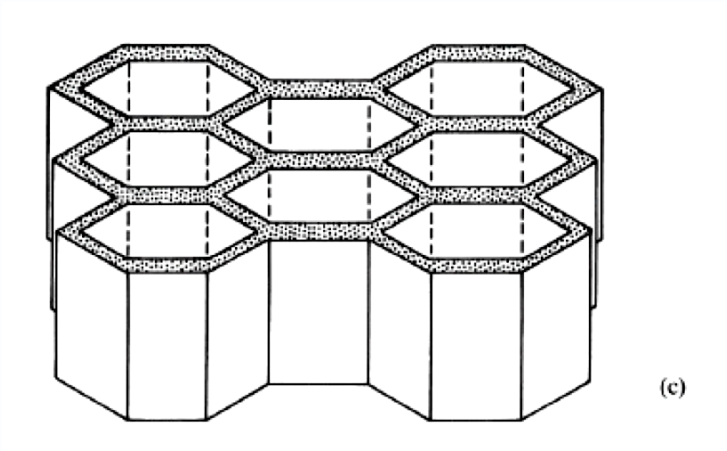

Data for **relative compressive strength** of cancellous bone (for unspecified orientation) fall essentially on the same line with slope 2. TENSILE IS 3/2

Fig. 5.8, 5.9 Gibson, Ashby, Harley

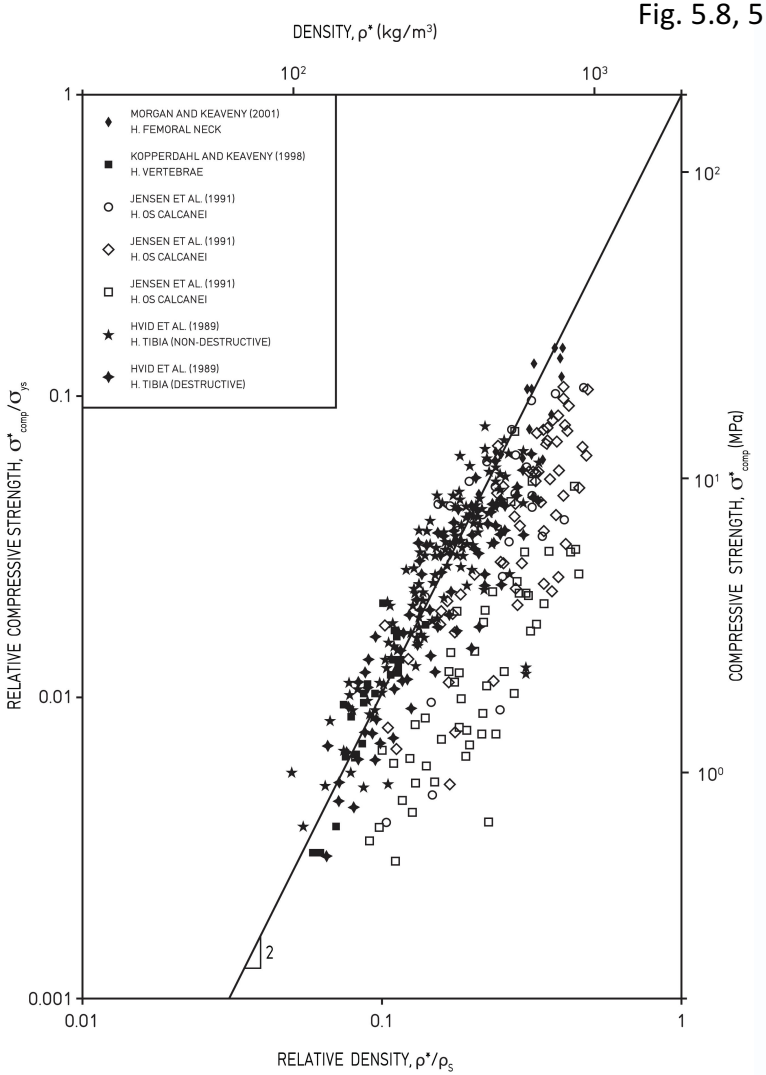

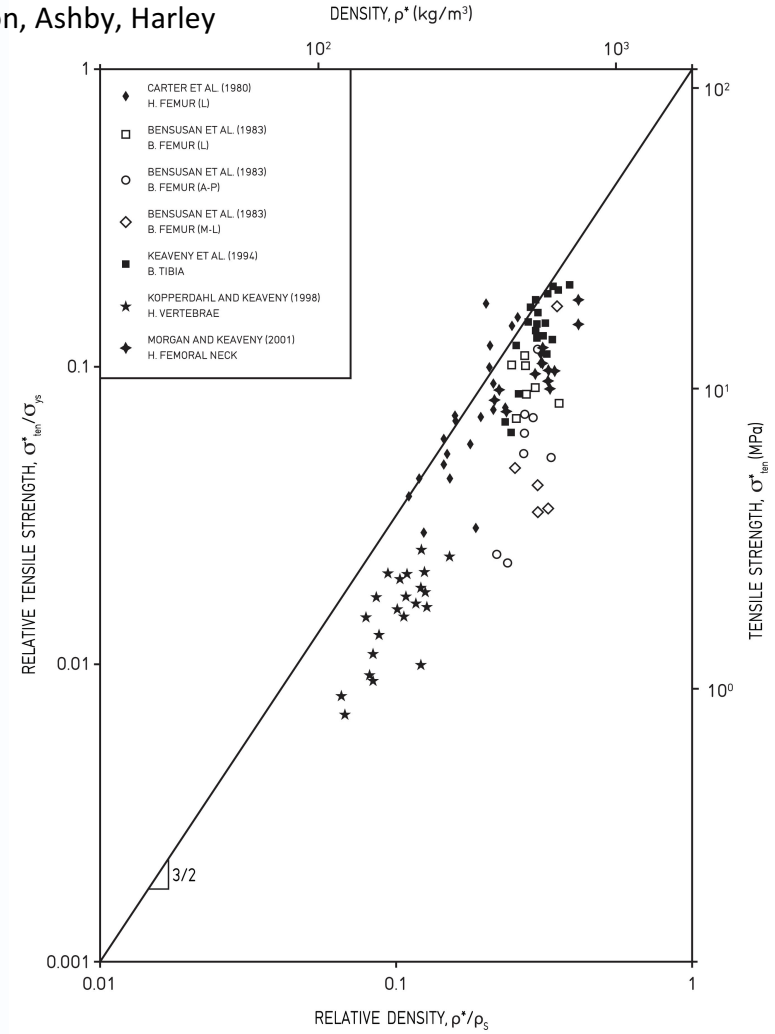

Compressive strength, prismatic model

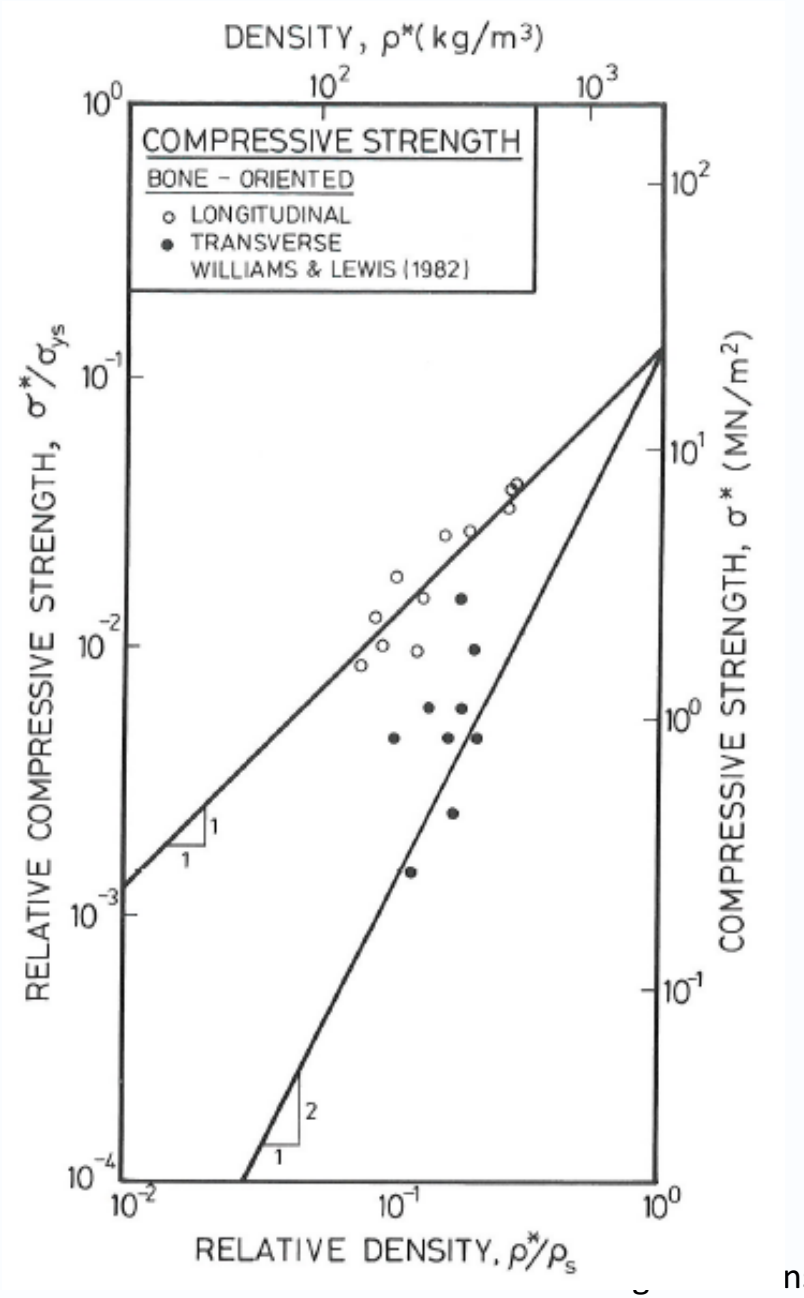

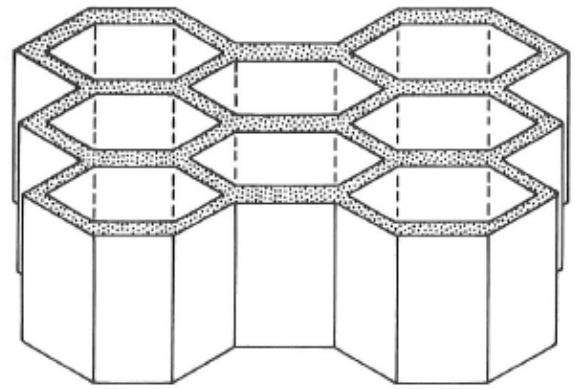

(c)

In summary, for cellular solids:

- Cellular solids theory was developed to describe mechanical properties of cellular solids like foams, honeycombs etc.
- It is based on assuming the
  1. deformation mode **(bending, buckling, fracture, plastic deformation, etc)**
  2. unit cell shape **(equiaxed, prismatic, etc)**
  3. loading direction/mode **(uniaxial, biaxial, tension, compression, longitudinal, transverse)**
- Using this approach, we can derive the relationship between a relative property (modulus, strength etc) and the relative density raised to a power.
- The power is different for different architectures and loading directions, etc. (e.g. 1-3 above), but is predictable for engineering cellular solids.
- If we look at data for cancellous bone with ***unspecified orientation***, it ***follows similar trends as for cellular solids theory***.
- If we further break data into stress oriented, prismatic structure etc, the data follow cellular solids theory very closely.
- This tells us that we actually do **<u>understand the deformation modes</u>** of different cancellous bone architectures if we look at the slope of relative properties.
- Pretty cool considering the range in properties and architectures of cancellous bone!!!

A total of **21** vote(s) in **139** hours

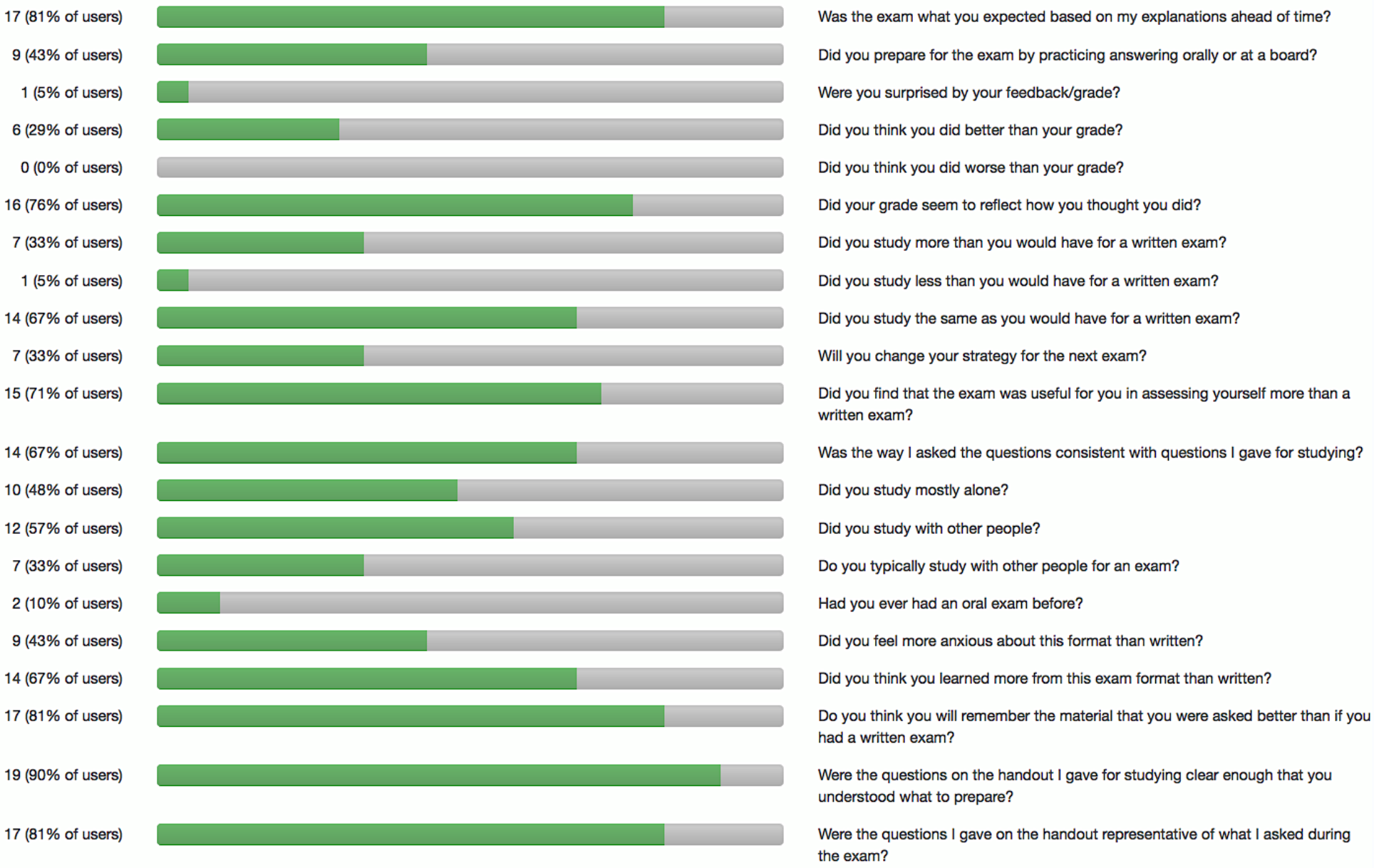

Properties depend on orientation – (anisotropic at "apparent" level")
Cellular solids theory can explain considering deformation mechanisms…

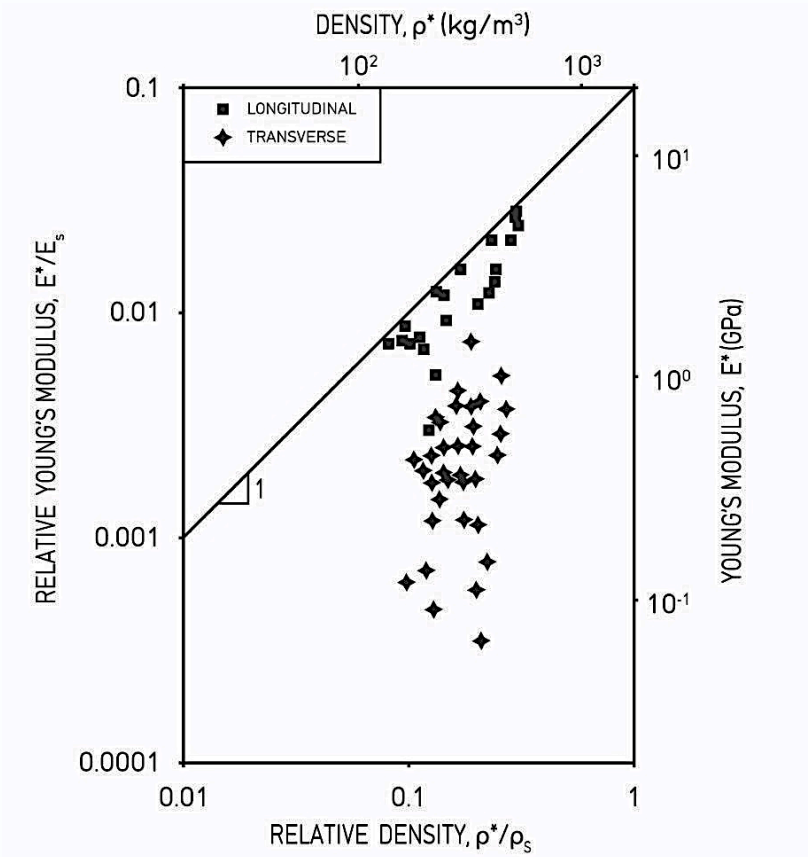

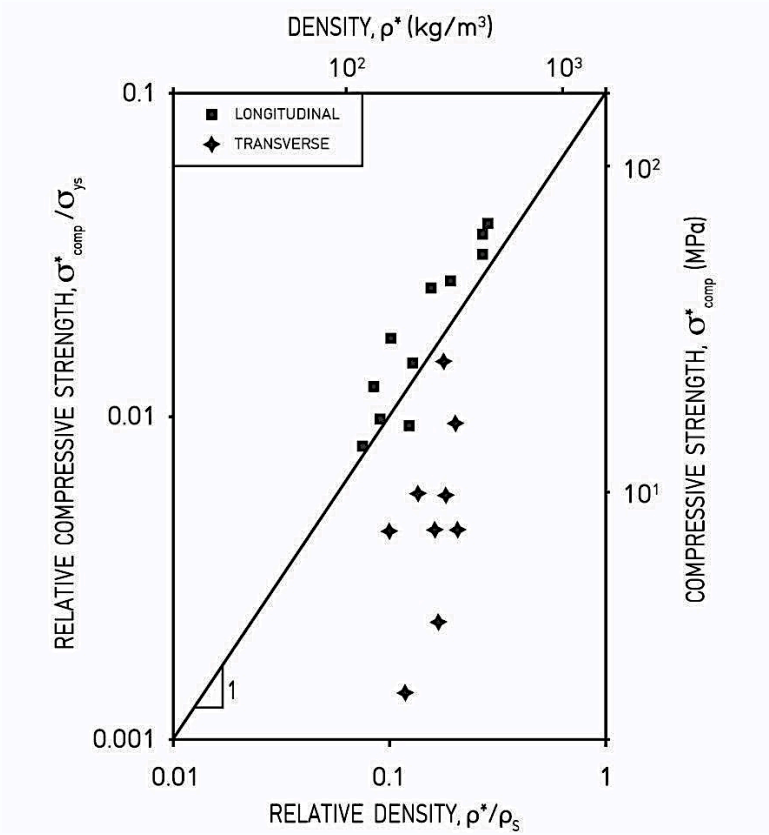

Fig. 5.10 (left) Young's modulus of highly oriented trabecular bone from the human proximal tibial epiphysis plotted against density. The relative moduli are normalized by Es = 18 GPa and the relative densities are normalized by ρs = 1800 kg/m3. **The data for loading along the principal direction of trabecular orientation fall on a line of slope 1.** All data from Williams and Lewis (1982).

Fig. 5.11 (right) Compressive strength of highly oriented trabecular bone from the human proximal tibial epiphysis plotted against relative density. The relative compressive strengths are normalized by yield strength in comp = 182 MPa and the relative densities are normalized by ρs = 1800 kg/m3. **The data for loading in the longitudinal direction fall roughly along a line of slope 1.** All data from Williams and Lewis (1982). **FROM Gibson, Ashby, and Harley 2010**

Trabecular structure develops along principle stress trajectories. What does this tell us about variations in properties of trabecular bone?

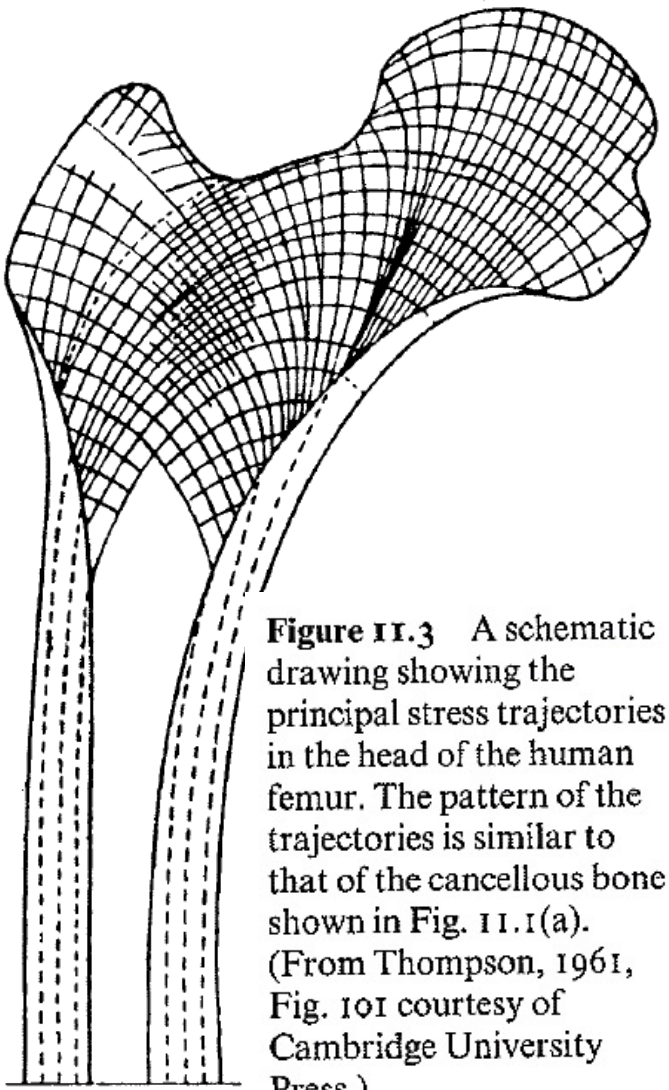

Figure 11.3 A schematic drawing showing the principal stress trajectories in the head of the human femur. The pattern of the trajectories is similar to that of the cancellous bone shown in Fig. 11.1(a). (From Thompson, 1961, Fig. 101 courtesy of Cambridge University Press.)

Figure 9.4

Cross-sections showing the open porous structure of trabecular bone. The large sample on the left is the femoral head seen in a longitudinal section. Note the transition from cortical bone in the shaft of the femur to trabecular bone at the head, with only a thin layer of cortical bone on the surface. This photograph is from an 1870 article by the German anatomist Julius Wolff in which he compared the orientation of the trabeculae in the proximal femur to the predicted trajectories of the principal stresses [7].